F.A.S. RTE.	SECTION	COUNTY	TOTAL SHEETS	SHEET NO.
----	25-00177-00-BR	LASALLE	28	1
	--- ILLINOIS	CONTRACT NO. L0C16		

INDEX OF SHEETS

1	COVER SHEET
2	GENERAL NOTES
3-4	SUMMARY OF QUANTITIES
5	TYPICAL SECTIONS
6	REMOVAL PLAN
7	PLAN AND PROFILE
8	EROSION CONTROL PLAN
9	INTERSECTION DETAIL
10-26	STRUCTURE PLANS
27-28	SOIL BORINGS

STANDARDS

SEE LIST OF DOT HIGHWAY STANDARDS ON SHEET 2

UTILITIES

AMEREN
#6 RICHARD MARK WAY
COLLINSVILLE, IL 62234
LESLIE CROWNOVER
(217) 535-5791

AT&T
1000 COMMERCE DRIVE
OAKBROOK, IL 60523
TOM LASKOWSKI
(630) 573-5643

CITY OF OTTAWA
301 W. MADISON STREET
OTTAWA, IL 61350
DAVE ERWIN, PUBLIC UTILITIES
(815)433-0161 EXT. 312

MEDIACOM
111 W. SUPERIOR STREET
OTTAWA, IL 61350
(855) 633-4226

NICOR
1844 FERRY ROAD
NAPERVILLE, IL 60563
SAKIBUL FORAH
(630) 388-2903

COMMERCIAL BROADBAND SOLUTION
STEVE GRAVES
(574) 304-0581

FUNCTIONAL CLASSIFICATION

LOCAL STREET: 150 ADT (2029)
DESIGN SPEED: 20 MPH

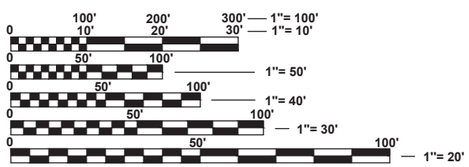

FULL SIZE PLANS HAVE BEEN PREPARED USING STANDARD ENGINEERING SCALES. REDUCED SIZED PLANS WILL NOT CONFORM TO STANDARD SCALES. IN MAKING MEASUREMENTS ON REDUCED PLANS, THE ABOVE SCALES MAY BE USED.

J.U.L.I.E.
JOINT UTILITY LOCATION INFORMATION FOR EXCAVATION
1-800-892-0123
OR 811

CONTRACT NO. L0C16

STATE OF ILLINOIS
DEPARTMENT OF TRANSPORTATION
DIVISION OF HIGHWAYS
PLANS FOR PROPOSED
LOCAL PROJECT FUNDING GRANT
BRIDGE REPLACEMENT
POST STREET (MUN 6610C) OVER GOOSE CREEK
SECTION 25-00177-00-BR
CITY OF OTTAWA
S.N. 050-7401 (E) 050-7406 (P)
LASALLE COUNTY
C-93-097-26



LOCATION OF SECTION INDICATED THUS: -

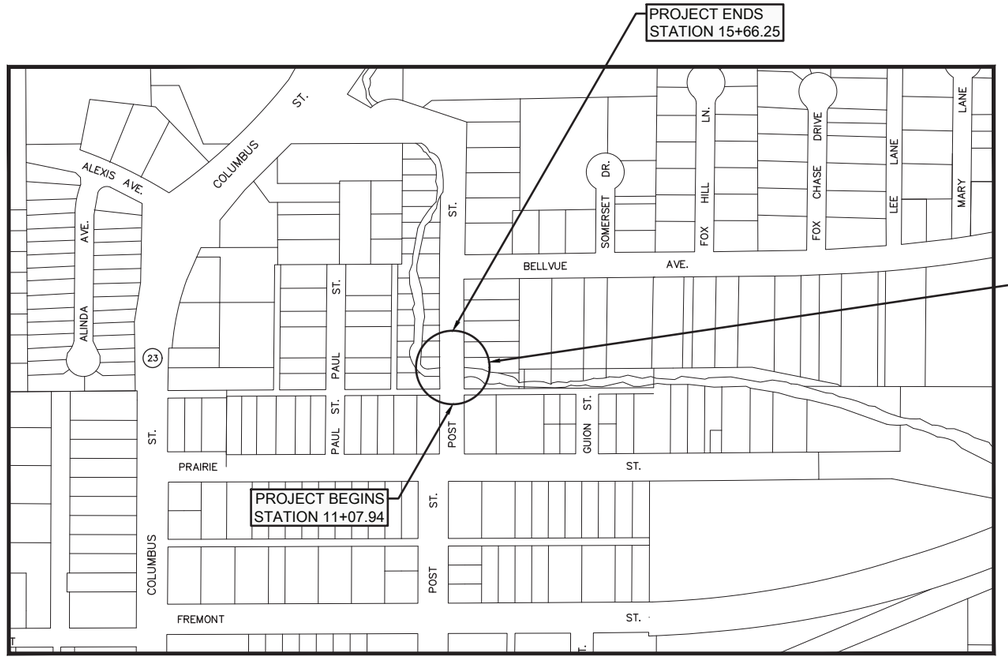

EXISTING STRUCTURE:
TWO-SPAN PRECAST SLAB BRIDGE ON PIER AND CLOSED ABUTMENTS

PROPOSED STRUCTURE
SINGLE SPAN BRIDGE PPC DECK BEAM BRIDGE ON CLOSED ABUTMENTS
STA. 12+54.80
SN 050-7406

LOCATION MAP
N.T.S.

GROSS LENGTH = 458.3 FEET = 0.09 MILES
NET LENGTH = 458.3 FEET = 0.09 MILES

10/20/2026
date

DAVID A. HALL
LICENSED PROFESSIONAL ENGINEER NO. 062-065865
STATE OF ILLINOIS
expires 11-30-2027

signature

PROFESSIONAL DESIGN FIRM LICENSE NO. 184-001717

STATE OF ILLINOIS
DEPARTMENT OF TRANSPORTATION
DIVISION OF HIGHWAYS

SUBMITTED 10/21 20 26
CITY OF OTTAWA MAYOR

October 30 20 26
DISTRICT 3 LOCAL ROADS AND STREETS ENGINEER

RELEASED FOR BID BASED ON LIMITED REVIEW October 30, 20 26
REGION 2 ENGINEER

PRINTED BY THE AUTHORITY OF THE STATE OF ILLINOIS

DRAWN BY: KED	REVISIONS			
CHECKED BY: DAH	LEVEL	BY	DATE	DESCRIPTION
DATE: 02/2026				

Chamlin & Associates — PERU MORRIS OTTAWA ILLINOIS

POST STREET BRIDGE REPLACEMENT
SECTION 25-00177-00-BR
LASALLE COUNTY

COVER SHEET
SHEET of SHEETS

BID SET

CURRENT AS OF: 10/20/2026	
SCALE: AS NOTED	SHEET 1
FILE NO.: 111641.01 Y–	OF 28

CHAMLIN & ASSOCIATES, INC. © 2024
Drawing Name: R:\USERS\1 - STRUCTURAL\111641.01 - Ottawa Post St. Bridge Repl Design Ph II\CAD\PLANS\111641.01-001-COVER.dwg Last Modified: Tuesday, October 20, 2026 12:07:24 PM by Kurt Decker
Plotted On: Tuesday, October 20, 2026 12:02:45 PM

F.A.S. RTE.	SECTION	COUNTY	TOTAL SHEETS	SHEET NO.
----	25-00177-00-BR	LASALLE	28	2
	---- ILLINOIS	CONTRACT NO. L0C16		

General Notes

1. The thickness of HMA shown on the plans is the nominal thickness. Deviations from the nominal thickness will be permitted when such deviations occur due to irregularities in the existing surface or base on which the HMA is placed.
2. Except as noted on plans, pavement grades shown are at the top of pavement surfaces.
3. The Engineer will be the sole judge concerning curing time for the various HMA lifts.
4. For stabilization, all Type III barricades will require a minimum of eight (8) sandbags per barricade.
5. Seeding will not be permitted at any time when the ground is frozen, wet, or in an untillable condition. Locations to be seeded will be determined by the Engineer.
6. All elevations referring to U.S.G.S. Mean Sea Level Datum.
7. Abandoned underground utilities that conflict with construction shall be disposed of outside the limits of the Right of Way according to Article 202.03 of the Standard Specifications and as directed by the Engineer. This work will not be paid for separately, but will be included in the cost of Earth Excavation.
8. Any reference to a Standard in these Plans shall be interpreted to mean the Edition as indicated by the subnumber shown in the list of Standards or the copy included in these Plans.
9. The following rates of application have been used in calculating plan quantities:

Granular Materials	2.05	tons/cu yd
HMA Surfacing	112	lbs/sq yd/in
Prime Coat for Aggregate Base	0.25	lbs/sq ft
Tack Coat for Milled HMA	0.05	lbs/sq ft

10. Members of J.U.L.I.E. known to be within the limits of the improvements are:
    - Ameren
    - AT&T
    - Commercial Broadband Solutions
    - City of Ottawa
    - Mediacom
    - Nicor
11. The Contractor shall contact J.U.L.I.E. at least 48 hours prior to excavation to determine which utilities are in the area.
12. The finished earthwork shall have a vegetation sustaining covering the top four inches in areas to be seeded. The vegetation sustaining soil required will not be paid for separately but will be included in the cost of the Earth Excavation.

STANDARDS

000001-08	STANDARD SYMBOLS, ABBREVIATIONS AND PATTERNS
001001-02	AREAS OF REINFORCEMENT BARS
001006	DECIMAL OF AN INCH AND OF A FOOT
280001-07	TEMPORARY EROSION CONTROL SYSTEMS
424001-12	PERPENDICULAR CURB RAMPS FOR SIDEWALKS
515001-04	NAME PLATE FOR BRIDGES
701001-02	OFF-ROAD OPERATIONS, 2L, 2W, MORE THAN 15' AWAY
701006-05	OFF-ROAD OPERATIONS, 2L, 2W, 15' TO 24" FROM PAVEMENT EDGE
701501-06	URBAN LANE CLOSURE, 2L, 2W, UNDIVIDED
701901-08	TRAFFIC CONTROL DEVICES
720001-01	SIGN PANEL MOUNTING DETAILS
BLR 21-9	TYPICAL APPLICATIONS OF TRAFFIC CONTROL DEVICES FOR CONSTRUCTION ON RURAL LOCAL HIGHWAYS
BLR 22-7	TYPICAL APPLICATIONS OF TRAFFIC CONTROL DEVICES FOR CONSTRUCTION ON RURAL LOCAL HIGHWAYS (TWO-LANE TWO WAY RURAL TRAFFIC) (ROAD CLOSED TO THRU TRAFFIC)

HMA MIXTURE REQUIREMENT TABLE

LOCATIONS:	ENTIRE PROJECT	ENTIRE PROJECT
MIXTURE USE(S):	HMA BINDER COURSE	HMA SURFACE COURSE
BINDER GRADE (PG):	PG 64-22	PG 64-22
DESIGN AIR VOIDS:	4.0% @ N50	4.0% @ N50
MIXTURE COMPOSITION: (MIXTURE GRADATION)	IL-19.0	IL-9.5
FRICTION AGGREGATE:		MIXTURE C
MIXTURE WEIGHT:	112.0 LB/SY/IN	112.0 LB/SY/IN
QUALITY MANAGEMENT PROGRAM:	QC/QA	QC/QA
SUBLOT SIZE:	N/A	N/A
DENSITY TEST METHOD:	NUCLEAR	NUCLEAR
MATERIAL TRANSFER DEVICE (REQUIRED):	NO	NO

Erosion and Sediment Control (ESC) Notes

Soil erosion and sediment control shall be in accordance with applicable portions of the Illinois Urban Manual, updated 2020.

Provisions shall be made to minimize the transport of sediment by vehicular traffic from the construction site. All public streets shall be cleaned daily or as directed by the Engineer to keep clean of sediment and debris caused by construction activities. Adjacent properties shall be protected from sediment deposition by use of an acceptable erosion control practice such as vegetative buffer strips or sediment barriers. Should an erosion control item not be included as a Bid Item or not be addressed per Special Provision and be determined necessary by the Engineer, those items will be paid for at a pre-approved unit price.

It will be the Contractor/Sub-Contractor's responsibility to implement and maintain all necessary erosion control measures.

Contractor shall employ all erosion control devices as shown on the plans, applicable IDOT Roadway Standards, and applicable Illinois Urban Manual Standards. A temporary concrete washout facility shall be constructed as depicted on the plans if concrete will wash out at the work site.

All erosion control measures will be maintained in accordance with the IDOT Erosion Control and Sediment Control Field Guide for construction inspection found on the construction tab at: https:///idot.illinois.gov/

All the soil erosion and sediment control features must be constructed prior to the commencement of upland disturbance. Soil disturbance must be phased or enacted in such manner as to minimize erosion. Soil stabilization measures must consider the time of year, site conditions and the use of temporary and/or permanent measures.

The Contractor shall check all ESC measures weekly and after each rainfall, 0.5 inches or greater in a 24-hour period, or equivalent snowfall. Additionally, during winter months, all measures should be checked by the Contractor after each significant snowmelt.

Temporary or permanent stabilization shall be initiated immediately upon completion of disturbance or if the work area is to be left undisturbed for 14 days or more.

Under no circumstances shall the Contractor prolong final grading and shaping so that the entire project can be permanently seeded at one time.

The Contractor's representative and the Engineer must keep a written report summarizing the required inspections taken place. The reports must be kept at the site during construction and submitted to the Owner upon project completion. The reports must also be retained for three years from the date the site is finally stabilized.

Any sediment laden dewatering discharge must be directed to an approved sediment trapping control measure prior to release from the project site. Any dewatering method used by the Contractor shall be included in the cost of the item.

Seeding Usage:

Class 3 shall be used at final disturbed construction areas indicated on the Plans.

Erosion Control Operations & Maintenance

All maintenance of erosion control systems will be the responsibility of the Contractor.

Topsoil Placement

Topsoil will be placed on final slopes which will not be disturbed by future construction, as directed by the Engineer. Topsoil will not be placed on surfaces which will be paved in the future nor on temporary steep slopes.

Summary of Commitments
Trees 3" or greater in diameter at breast height will not be cleared April 1 through September 30.

EARTHWORK SCHEDULE

LOCATION	EARTH EXCAVATION * (CU YD)	STRUCTURE EXCAVATION	EXCAVATION ADJUSTED FOR SHRINKAGE (25%) (CU YD)	EMBANKMENT * (CU YD)	EARTHWORK BALANCE WASTE (+) OR SHORTAGE (-) (CU YD)
NORTH ABUTMENT		425	361		361
SOUTH ABUTMENT		400	340		340
NW QUAD	130		110		110
SW QUAD				220	-220
TOTALS	130	825	811	220	591

* EARTH EXCAVATION TO BE USED AS EMBANKMENT WITH SHRINKAGE FACTOR AS NOTED.

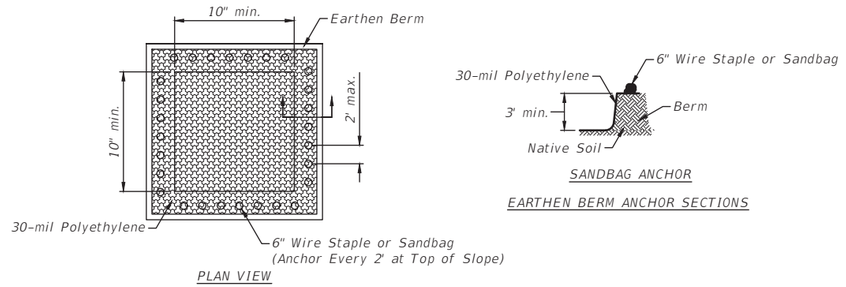

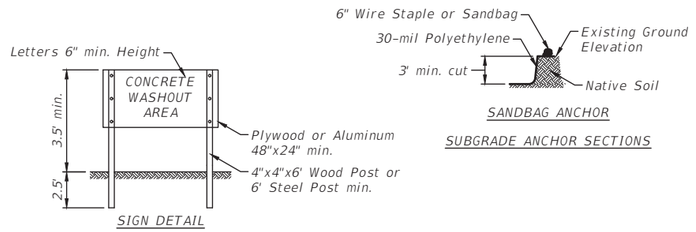

NOTES:
1. Maintaining temporary concrete washout facilities shall include removing and disposing of hardened concrete and/or slurry and returning the facilities to a functional condition.
2. Facility shall be cleaned or reconstructed in a new area once washout becomes two-thirds full.
3. Cost of washout facility shall be included in the concrete pay items.

TEMPORARY CONCRETE WASHOUT FACILITY - EARTHEN TYPE

ILLINOIS URBAN MANUAL DRAWING IUM-654ET

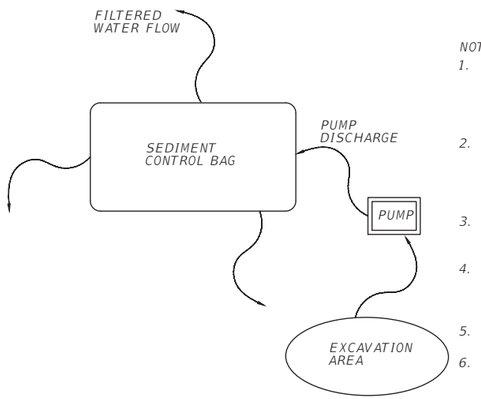

NOTES:
1. Sediment filtration bags shall be placed on a stabilized surface away from receiving waterways and/or construction activities. Sediment filtration bags shall not be placed, whole or partially, within aquatic areas (wetlands,streams, etc.) or water conveyance features.
2. Sediment filter bags shall be raised above the supporting ground on a surface, or material, that allows water to flow out of the bottom of the bag. The pump discharge shall not exceed the design discharge rate of the selected sediment filter bag.
3. Sediment filter bags shall meet the material requirements of the Illinois Urban Manual, Material Specifications 592, Table 2, Class I with minimum tensile strength of 200 lbs.
4. Sediment filter bags shall be sized per manufacturer recommendations and based on the sized of pump. Minimum bag size shall be 10 feet x 15 feet with a useable surface drainage area of 300 square feet.
5. Largest size pump hose to be used with a sediment filtration bag is 4-inches. Multiple hoses shall not be used to one bag.
6. Sediment filtration bags must be disposed of according to manufacturer's instructions. Bags may not be reused.

SEDIMENT CONTROL BAG FOR DEWATERING

ILLINOIS URBAN MANUAL STANDARD 830

CHAMLIN & ASSOCIATES, INC. © 2024
Drawing Name: R:\USERS\1 - STRUCTURAL\111641.01 - Ottawa Post St. Bridge Repl Design Ph II\CAD\PLANS\111641.01-002-NOTES.dwg Last Modified: Tuesday, September 29, 2026 2:40:30 PM Plotted On: Wednesday, October 21, 2026 7:59:12 AM by Kurt Decker

DRAWN BY: KED	REVISIONS				PERU MORRIS OTTAWA ILLINOIS	POST STREET BRIDGE REPLACEMENT SECTION 25-00177-00-BR LASALLE COUNTY	GENERAL NOTES	BID SET	CURRENT AS OF: 10/20/2026	
CHECKED BY: DAH	LEVEL	BY	DATE	DESCRIPTION			SHEET of SHEETS		SCALE: AS NOTED	SHEET 2
DATE: 02/2026									FILE NO.: 111641.01 Y-	OF 28

F.A.S. RTE.	SECTION	COUNTY	TOTAL SHEETS	SHEET NO.
----	25-00177-00-BR	LASALLE	28	3
	--- ILLINOIS	CONTRACT NO. L0C16		

	CODE NO.	ITEM	UNIT	TOTAL QUANTITY	CONSTR. CODE BRIDGE 0010 050-7406
	20100210	TREE REMOVAL (OVER 15 UNITS DIAMETER)	UNIT	20	20
	20200100	EARTH EXCAVATION	CU YD	130	130
	20300100	CHANNEL EXCAVATION	CU YD	100	100
	20700220	POROUS GRANULAR EMBANKMENT	CU YD	712	712
	21001000	GEOTECHNICAL FABRIC FOR GROUND STABILIZATION	SQ YD	165	165
*	25000300	SEEDING, CLASS 3	ACRE	0.25	0.25
*	25000400	NITROGEN FERTILIZER NUTRIENT	POUND	23	23
*	25000500	PHOSPHORUS FERTILIZER NUTRIENT	POUND	23	23
*	25000600	POTASSIUM FERTILIZER NUTRIENT	POUND	23	23
*	25100115	MULCH, METHOD 2	ACRE	0.25	0.25
*	25100630	EROSION CONTROL BLANKET	SQ YD	312	312
*	28000305	TEMPORARY DITCH CHECKS	FOOT	20	20
*	28000400	PERIMETER EROSION BARRIER	FOOT	250	250
*	28000510	INLET FILTERS	EACH	2	2

* DENOTES SPECIALTY ITEM

CODE NO.	ITEM	UNIT	TOTAL QUANTITY	CONSTR. CODE BRIDGE 0010 050-7406
28100107	STONE RIPRAP, CLASS A4	SQ YD	240	240
28200200	FILTER FABRIC	SQ YD	240	240
35101600	AGGREGATE BASE COURSE, TYPE B 4"	SQ YD	43	43
35102400	AGGREGATE BASE COURSE, TYPE B 12"	SQ YD	116	116
40600275	BITUMINOUS MATERIALS (PRIME COAT)	POUND	273	273
40600290	BITUMINOUS MATERIALS (TACK COAT)	POUND	317	317
40603080	HOT-MIX ASPHALT BINDER COURSE, IL-19.0, N50	TON	21	21
40604050	HOT-MIX ASPHALT SURFACE COURSE, IL-9.5, MIX "C", N50	TON	104	104
42300400	PORTLAND CEMENT CONCRETE DRIVEWAY PAVEMENT, 8 INCH	SQ YD	70	70
42400200	PORTLAND CEMENT CONCRETE SIDEWALK 5 INCH	SQ FT	1729	1729
42400800	DETECTABLE WARNINGS	SQ FT	10	10
44000100	PAVEMENT REMOVAL	SQ YD	119	119
44000157	HOT-MIX ASPHALT SURFACE REMOVAL, 2"	SQ YD	709	709
44000200	DRIVEWAY PAVEMENT REMOVAL	SQ YD	68	68

* DENOTES SPECIALTY ITEM

CHAMLIN & ASSOCIATES, INC. © 2024
Drawing Name: K:\USERS\1 - STRUCTURAL\111641.01 - Ottawa Post St. Bridge Repl Design Ph II\CAD\PLANS\111641.01-003-SSQ.dwg Last Modified: Wednesday, October 21, 2026 2:29:49 PM Plotted On: Thursday, October 22, 2026 4:00:22 PM by Kurt Decker

DRAWN BY: KED	REVISIONS				PERU MORRIS OTTAWA ILLINOIS	POST STREET BRIDGE REPLACEMENT SECTION 25-00177-00-BR LASALLE COUNTY	SUMMARY OF QUANTITIES	BID SET	CURRENT AS OF: 10/20/2026	
CHECKED BY: DAH	LEVEL	BY	DATE	DESCRIPTION			SHEET of SHEETS		SCALE: AS NOTED	SHEET 3
DATE: 02/2026									FILE NO.:111641.01 Y--	OF 28

F.A.S. RTE.	SECTION	COUNTY	TOTAL SHEETS	SHEET NO.
----	25-00177-00-BR	LASALLE	28	4
	--- ILLINOIS	CONTRACT NO. L0C16		

	CODE NO.	ITEM	UNIT	TOTAL QUANTITY	CONSTR. CODE BRIDGE 0010 050-7406
	44000500	COMBINATION CURB AND GUTTER REMOVAL	FOOT	62	62
	48101498	AGGREGATE SHOULDERS, TYPE B 4"	SQ YD	13	13
	50100100	REMOVAL OF EXISTING STRUCTURES	EACH	1	1
	50200100	STRUCTURE EXCAVATION	CU YD	825	825
	50300225	CONCRETE STRUCTURES	CU YD	214	214
	50300255	CONCRETE SUPERSTRUCTURE	CU YD	8.6	8.6
	50400405	PRECAST PRESTRESSED CONCRETE DECK BEAMS (21" DEPTH)	SQ FT	1145	1145
*	50800205	REINFORCEMENT BARS, EPOXY COATED	POUND	36040	36040
	50900211	STEEL RAILING, TYPE IL-OH	FOOT	36	36
	50901720	BICYCLE RAILING	FOOT	75	75
	51500100	NAME PLATES	EACH	1	1
	550B0360	STORM SEWERS, CLASS B, TYPE 2 15"	FOOT	6	6
	56104900	WATER VALVES 6"	EACH	1	1
	56107100	REMOVE AND RELOCATE WATER MAIN 6"	FOOT	104	104

* DENOTES SPECIALTY ITEM

	CODE NO.	ITEM	UNIT	TOTAL QUANTITY	CONSTR. CODE BRIDGE 0010 050-7406
	56109418	DUCTILE IRON WATER MAIN FITTINGS 6" 45.00 DEGREE BEND	EACH	6	6
	58100200	WATERPROOFING MEMBRANE SYSTEM	SQ YD	127	127
	58300100	PORTLAND CEMENT MORTAR FAIRING COURSE	FOOT	343	343
	59100100	GEOCOMPOSITE WALL DRAIN	SQ YD	162	162
	60255500	MANHOLES TO BE ADJUSTED	EACH	1	1
	60605000	COMBINATION CONCRETE CURB AND GUTTER, TYPE B-6.24	FOOT	110	110
	67100100	MOBILIZATION	L SUM	1	1
*	78001130	PAINT PAVEMENT MARKING - LINE 6"	FOOT	136	136
	X5630706	CONNECTION TO EXISTING WATER MAIN 6"	EACH	2	2
*	X7010216	TRAFFIC CONTROL AND PROTECTION, (SPECIAL)	L SUM	1	1
*	Z0013798	CONSTRUCTION LAYOUT	L SUM	1	1

* DENOTES SPECIALTY ITEM

CHAMLIN & ASSOCIATES, INC. © 2024
Drawing Name: R:\USERS\1 - STRUCTURAL\111641.01 - Ottawa Post St. Bridge Repl Design Ph II\CAD\PLANS\111641.01-004-S002.dwg Last Modified: Thursday, October 22, 2026 4:02:05 PM Plotted On: Thursday, October 22, 2026 4:03:03 PM by Kurt Decker

DRAWN BY: KED	REVISIONS				PERU MORRIS OTTAWA ILLINOIS	POST STREET BRIDGE REPLACEMENT SECTION 25-00177-00-BR LASALLE COUNTY	SUMMARY OF QUANTITIES	BID SET	CURRENT AS OF: 10/20/2026	
CHECKED BY: DAH	LEVEL	BY	DATE	DESCRIPTION			SHEET of SHEETS		SCALE: AS NOTED	SHEET 4
DATE: 02/2026									FILE NO.: 111641.01 Y–	OF 28

F.A.S. RTE.	SECTION	COUNTY	TOTAL SHEETS	SHEET NO.
----	25-00177-00-BR	LASALLE	28	5
	--- ILLINOIS	CONTRACT NO. L0C16		

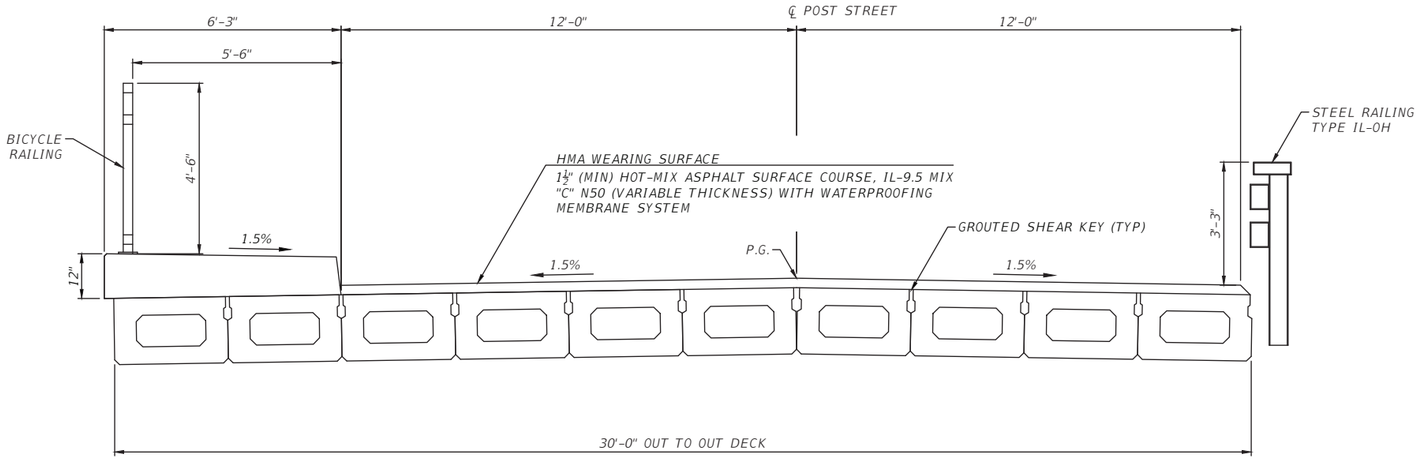

TYPICAL SECTION

STA. 12+34.72 TO STA. 12+74.88

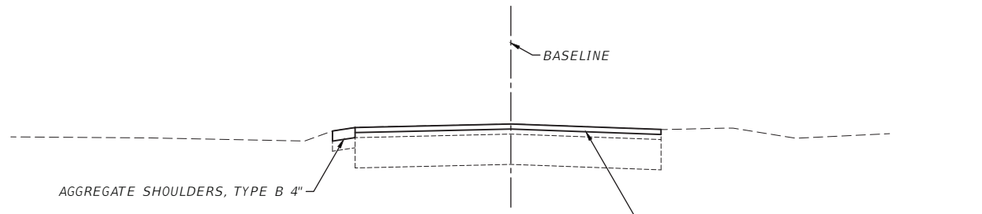

TYPICAL SECTION

STA. 15+08.35 TO STA. 15+66.25

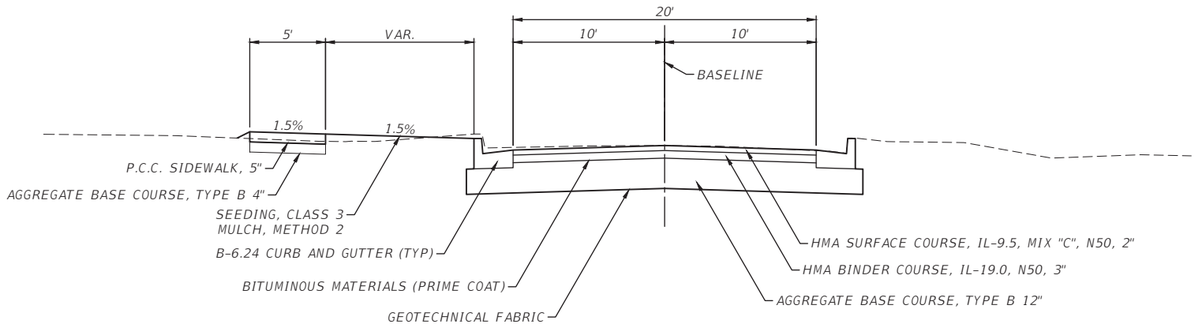

TYPICAL SECTION

STA. 12+05.23 TO STA. 12+34.72

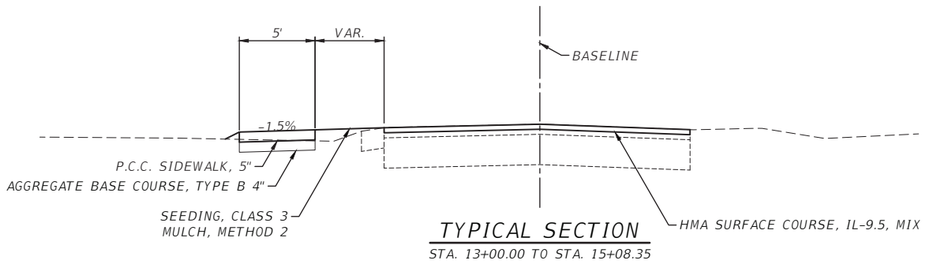

TYPICAL SECTION

STA. 13+00.00 TO STA. 15+08.35

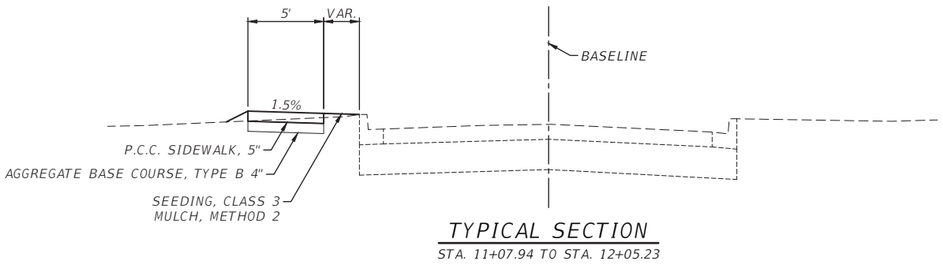

TYPICAL SECTION

STA. 11+07.94 TO STA. 12+05.23

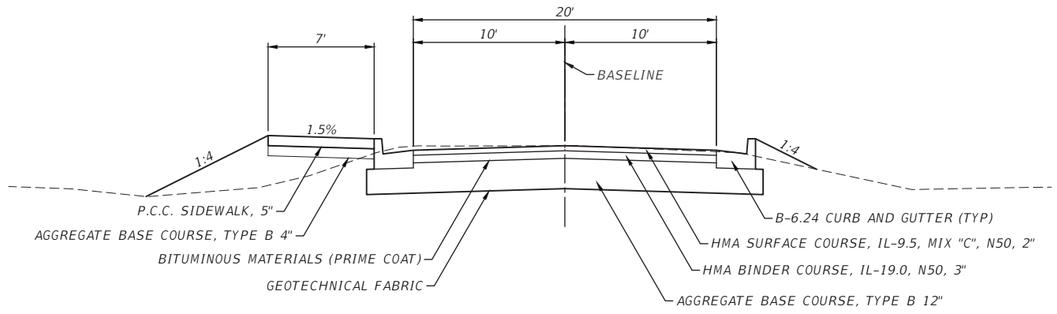

TYPICAL SECTION

STA. 12+74.88 TO STA. 13+00.00

CHAMLIN & ASSOCIATES, INC. © 2024
Drawing Name: R:\USERS\11 - STRUCTURAL\111641.01 - Ottawa Post St. Bridge Repl Design Ph II\CAD\PLANS\111641.01-005-TYP SEC.dwg Last Modified: Monday, August 31, 2026 4:14:50 PM Plotted On: Wednesday, October 21, 2026 8:10:09 AM by Kurt Decker

DRAWN BY: KED	REVISIONS			
CHECKED BY: DAH	LEVEL	BY	DATE	DESCRIPTION
DATE: 02/2026				

Chamlin & Associates

PERU MORRIS OTTAWA
ILLINOIS

POST STREET BRIDGE REPLACEMENT
SECTION 25-00177-00-BR
LASALLE COUNTY

TYPICAL SECTIONS

SHEET of SHEETS

BID SET

CURRENT AS OF: 10/20/2026	
SCALE: AS NOTED	SHEET 5
FILE NO.: 111641.01 Y–	OF 28

F.A.S. RTE.	SECTION	COUNTY	TOTAL SHEETS	SHEET NO.
----	25-00177-00-BR	LASALLE	28	6
	--- ILLINOIS	CONTRACT NO. L0C16		

GRAPHIC SCALE
0 10 20
(IN FEET)

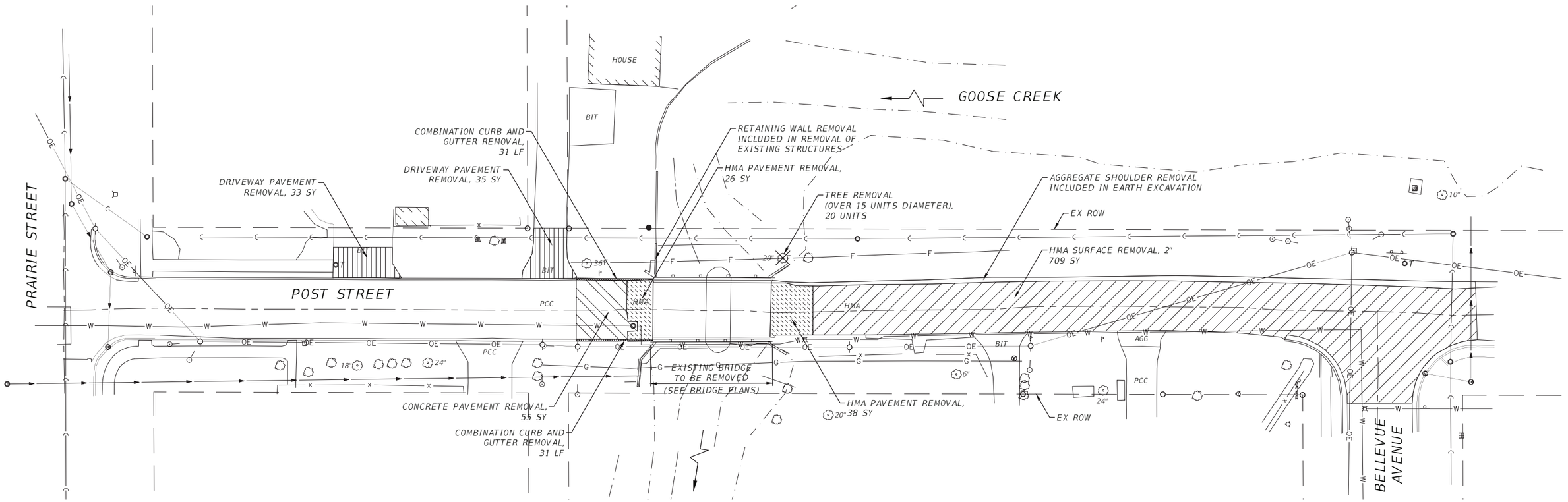

LEGEND
- HMA PAVEMENT REMOVAL
- CONCRETE PAVEMENT REMOVAL
- HMA SURFACE REMOVAL
- COMBINATION CURB AND GUTTER REMOVAL
- DRIVEWAY PAVEMENT REMOVAL

DRAWN BY: KED	REVISIONS			
CHECKED BY: DAH	LEVEL	BY	DATE	DESCRIPTION
DATE: 02/2026				

Chamlin & Associates
PERU MORRIS OTTAWA
ILLINOIS

POST STREET BRIDGE REPLACEMENT
SECTION 25-00177-00-BR
LASALLE COUNTY

REMOVAL PLAN
SHEET of SHEETS

BID SET

CURRENT AS OF: 10/20/2026	
SCALE: AS NOTED	SHEET 6
FILE NO.: 111641.01 Y–	OF 28

CHAMLIN & ASSOCIATES, INC. © 2024
Drawing Name: R:\USERS\1 – STRUCTURAL\111641.01 – Ottawa Post St. Bridge Repl Design Ph. II\CAD\PLANS\111641.01-006-REMOVAL.dwg Last Modified: Wednesday, October 21, 2026 8:12:52 AM Plotted On: Wednesday, October 21, 2026 8:13:15 AM by Kurt Decker

F.A.S. RTE.	SECTION	COUNTY	TOTAL SHEETS	SHEET NO.
----	25-00177-00-BR	LASALLE	28	7
	--- ILLINOIS	CONTRACT NO. L0C16		

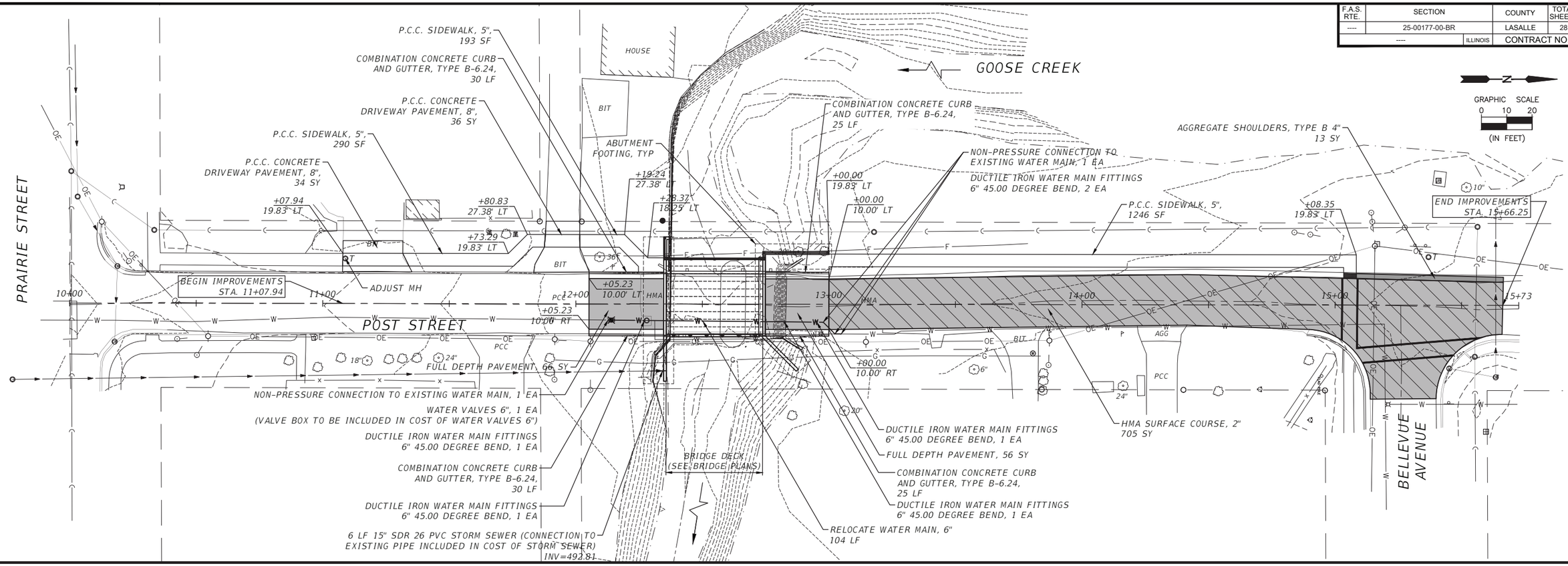

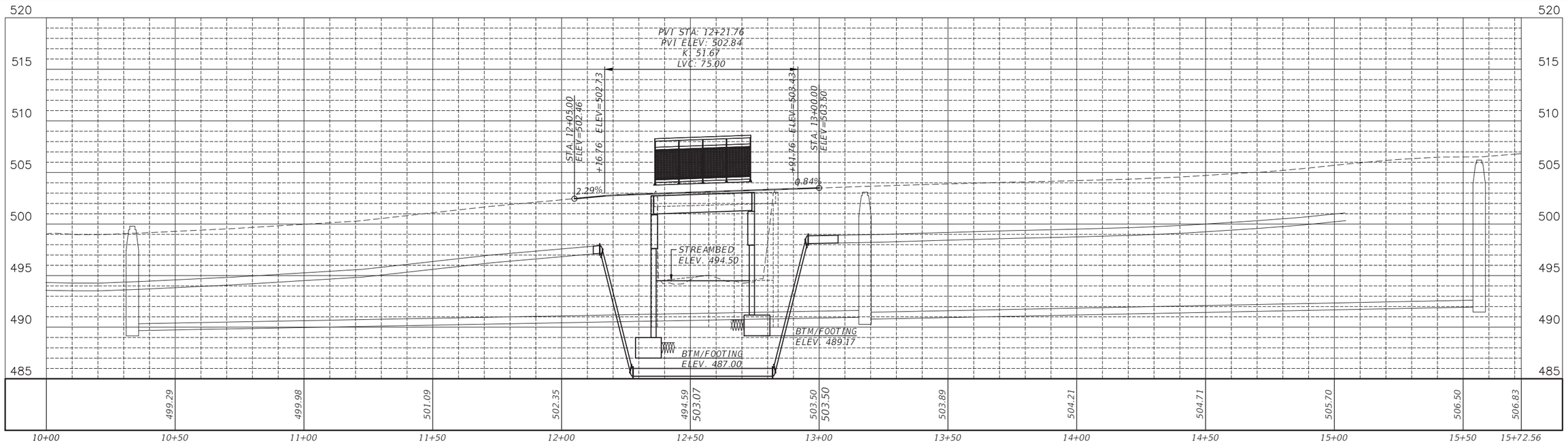

CHAMLIN & ASSOCIATES, INC. © 2024
Drawing Name: R:\USERS\1 - STRUCTURAL\111641.01 - Ottawa Post St. Bridge Repl Design Ph. I\CAD\PLANS\111641.01-007-PP01.dwg Last Modified: Wednesday, October 21, 2026 8:48:22 AM Plotted On: Thursday, October 22, 2026 4:12:41 PM by Kurt Decker

DRAWN BY: KED	REVISIONS			
CHECKED BY: DAH	LEVEL	BY	DATE	DESCRIPTION
DATE: 02/2026				

PERU MORRIS OTTAWA ILLINOIS

POST STREET BRIDGE REPLACEMENT
SECTION 25-00177-00-BR
LASALLE COUNTY

PLAN AND PROFILE

SHEET of SHEETS

BID SET

CURRENT AS OF: 10/20/2026	
SCALE: AS NOTED	SHEET 7
FILE NO.: 111641.01 Y–	OF 28

F.A.S. RTE.	SECTION	COUNTY	TOTAL SHEETS	SHEET NO.
----	25-00177-00-BR	LASALLE	28	8
	--- ILLINOIS	CONTRACT NO. L0C16		

GRAPHIC SCALE
0 10 20
(IN FEET)

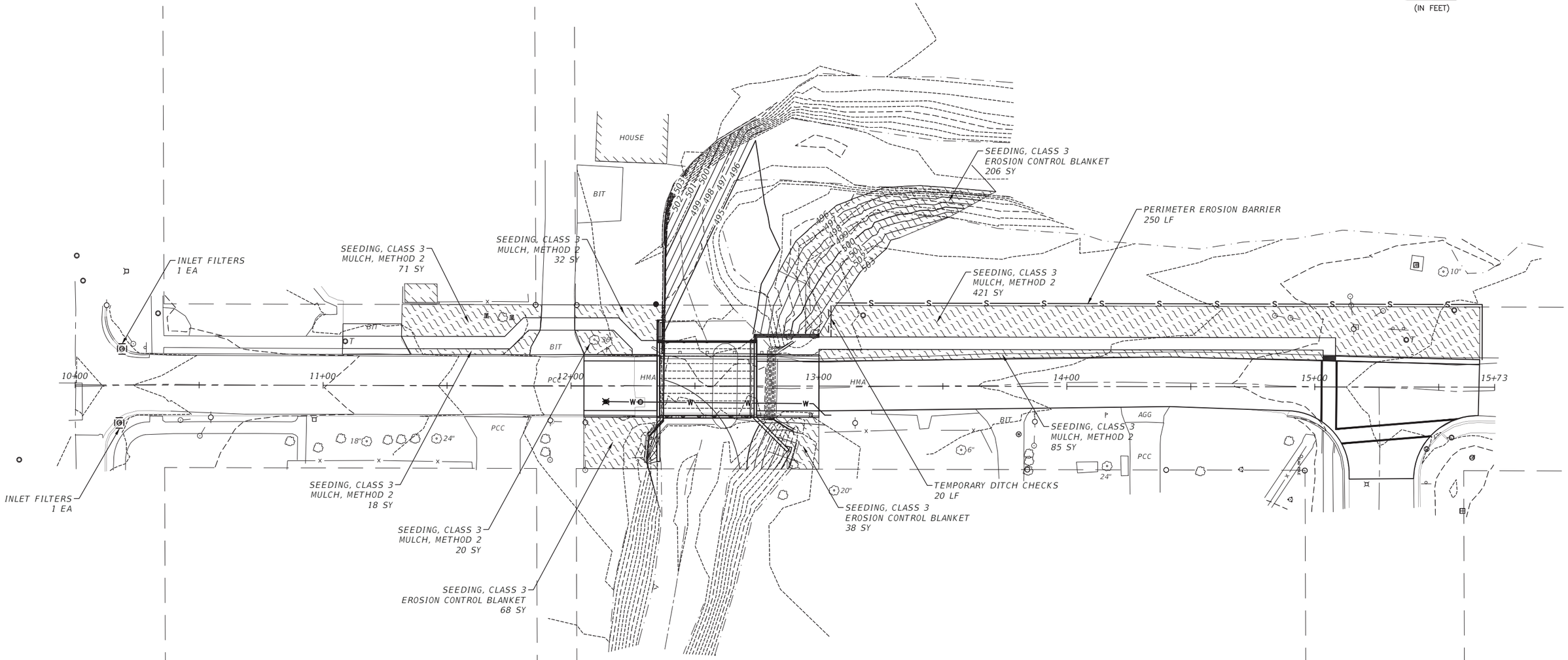

DRAWN BY: KED	REVISIONS				PERU MORRIS OTTAWA ILLINOIS	POST STREET BRIDGE REPLACEMENT SECTION 25-00177-00-BR LASALLE COUNTY	EROSION CONTROL PLAN	BID SET	CURRENT AS OF: 10/20/2026	
CHECKED BY: DAH	LEVEL	BY	DATE	DESCRIPTION	Chamlin & Associates		SHEET of SHEETS		SCALE: AS NOTED	SHEET 8
DATE: 02/2026									FILE NO.: 111641.01 Y–	OF 28

CHAMLIN & ASSOCIATES, INC. © 2024
Drawing Name: R:\USERS\1 - STRUCTURAL\111641.01 - Ottawa Post St. Bridge Repl Design Ph II\CAD\PLANS\111641.01-008-EROS.dwg Last Modified: Wednesday, October 21, 2026 2:08:29 PM Plotted On: Thursday, October 22, 2026 4:13:09 PM by Kurt Decker

F.A.S. RTE.	SECTION	COUNTY	TOTAL SHEETS	SHEET NO.
----	25-00177-00-BR	LASALLE	28	9
	--- ILLINOIS	CONTRACT NO. L0C16		

GRAPHIC SCALE
0 2.5 5
(IN FEET)
N

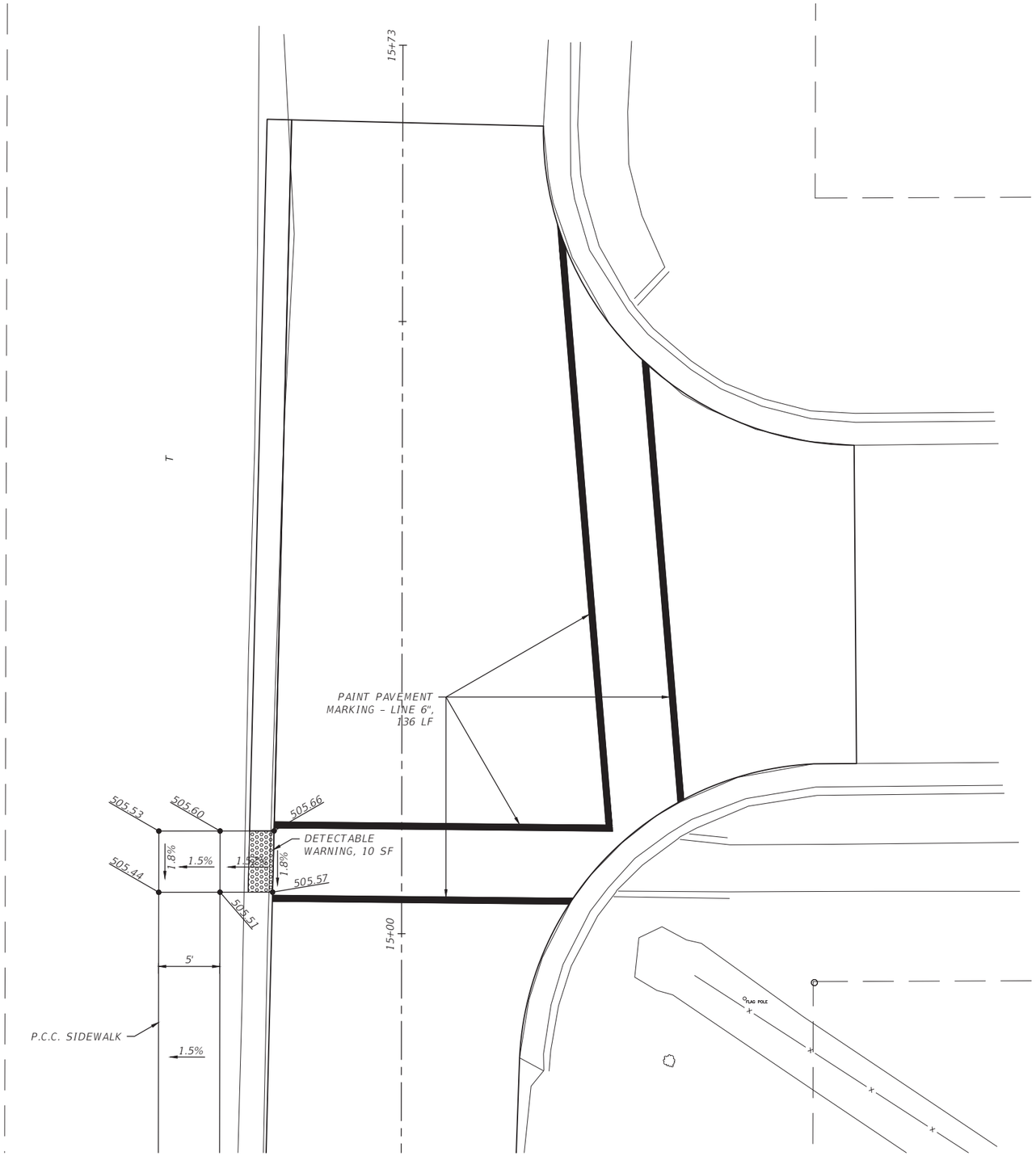

CHAMLIN & ASSOCIATES, INC. © 2024
Drawing Name: K:\USERS\1 - STRUCTURAL\111641.01 - Ottawa Post St. Bridge Repl Design Ph II\CAD\PLANS\111641.01-009-INT DTL.dwg Last Modified: Monday, August 31, 2026 4:13:55 PM Plotted On: Wednesday, October 21, 2026 8:49:59 AM by Kurt Decker

DRAWN BY: KED	REVISIONS			
CHECKED BY: DAH	LEVEL	BY	DATE	DESCRIPTION
DATE: 02/2026				

Chamlin & Associates
PERU MORRIS OTTAWA
ILLINOIS

POST STREET BRIDGE REPLACEMENT
SECTION 25-00177-00-BR
LASALLE COUNTY

INTERSECTION DETAIL
SHEET of SHEETS

BID SET

CURRENT AS OF: 10/20/2026	
SCALE: AS NOTED	SHEET 9
FILE NO.: 111641.01 Y–	OF 28

F.A.S. RTE.	SECTION	COUNTY	TOTAL SHEETS	SHEET NO.
----	25-00177-00-BR	LASALLE	28	10
	--- ILLINOIS	CONTRACT NO. L0C16		

EXISTING STRUCTURE NO. 050-7401

Sta. 12+59.71 – Two span 13" reinforced concrete slab bridge supported by cast-in-place concrete closed abutments and pier with unknown foundations.

Structure closed to traffic during construction.

No Salvage.

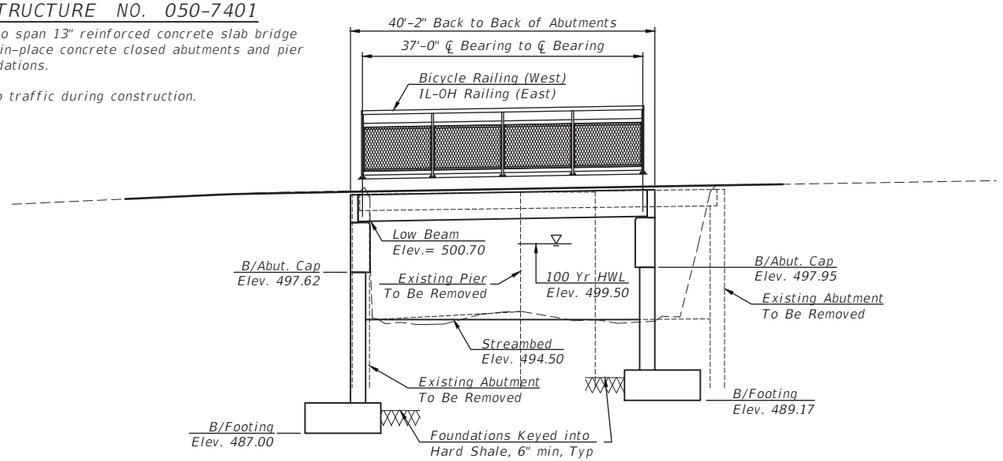

ELEVATION
(Looking West)

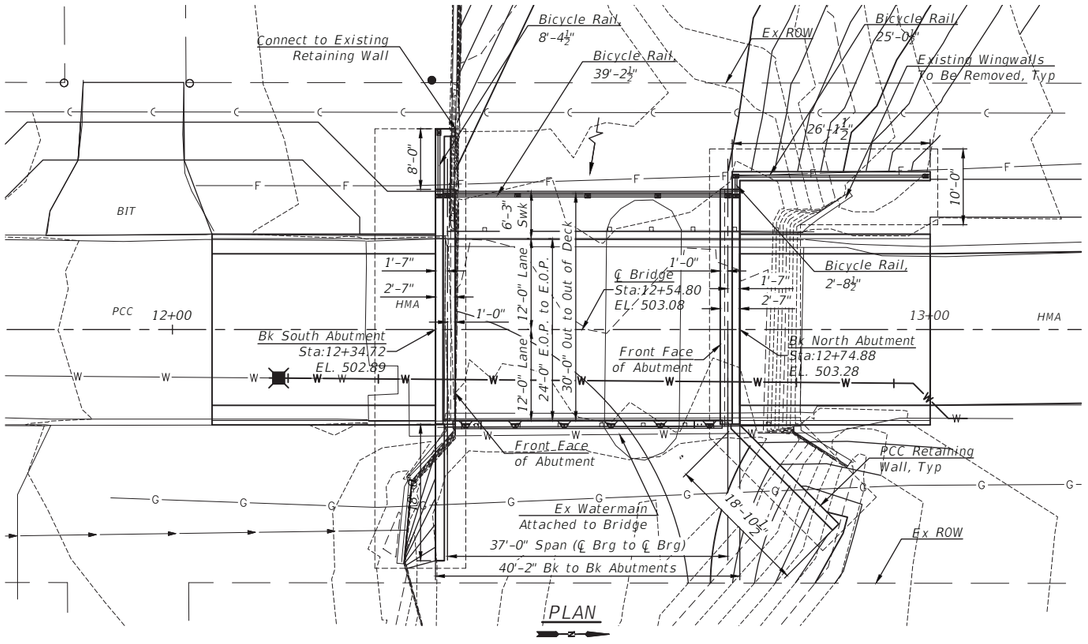

PLAN

WATERWAY INFORMATION TABLE

Drainage Area = 4.51 SQ MI			Overtopping Elev.=503.4' @ Sta. 12+59.71 (Exist.) / 503.5' @ Sta. 12+54.80 (Prop.)									
Flood	Freq. Yr.	Q C.F.S.	Opening Sq. Ft.						Nat. H.W.E.	Head - Ft.		Headwater El.	
			Exist.			Prop.				Exist.	Prop.	Exist.	Prop.
			Bridge	O.T.R.	Total	Bridge	O.T.R.	Total					
	10	538	86	0	86	121	0	121	498.0	1.0	0.0	499.0	498.0
Design	30	772	118	0	118	152	0	152	498.9	1.0	0.1	499.9	499.0
Base	100	1010	139	0	139	173	0	173	499.5	1.3	0.0	500.8	499.5
Overtopping	--	--	--	--	--	--	--	--	--	--	--	--	--
Max. Calc.	500	1380	167	0	167	201	0	201	500.3	1.6	0.2	501.9	500.5

Max. H.W.E.: n/a (ft.) Max. H.W.E. Date: n/a
Exist. 10 Year Velocity: 5.8 (ft./sec.)
Prop. 10 Year Velocity: 5.2 (ft./sec.)

GENERAL NOTES

Layout of the slope protection system may be varied to suit ground conditions in the field as directed by the Engineer.

All bars to be epoxy coated.

All proposed construction activities shall be in accordance with Statewide Permit 12 of the Illinois DNR Office of Water Resources and Nationwide Permit 3 or 14 of the U.S. Army Corps of Engineers.

Concrete sealer shall not be applied to surfaces to which Waterproofing Membrane System is applied.

Existing retaining wall removal shall be incidental to Removal of Existing Structures.

SEISMIC DATA

Seismic Performance Zone (SPZ) = 1
Design Spectral Acceleration at 1.0 sec. (S_{D1}) = 0.072g
Design Spectral Acceleration at 0.2 sec. (S_{DS}) = 0.126g
Soil Site Class = C

LOADING HL-93

Allow 50#/sq. ft. for future wearing surface.

DESIGN SPECIFICATIONS

2020 AASHTO LRFD Bridge Design Specifications, 9th Edition

DESIGN STRESSES

FIELD UNITS
f'c = 3,500 psi
fy = 60,000 psi (Reinforcement)

PRECAST PRESTRESSED UNITS
f'c = 6,000 psi
f'ci = 5,000 psi
fpu = 270,000 psi (1/2"℄ low lax. strands)
fpbt = 201,960 psi (1/2"℄ low lax. strands)
fy = 60,000 psi (Reinforcement)

INDEX OF STRUCTURE SHEETS

1. General Plan & Elevation
2. RipRap Details
3.-4. Superstructure Details
5.-6. 21"x36" PPC Deck Beam Details
7.-8. Bicycle Railing
9.-12. Steel Railing, Type IL-0H
13. Rail Post Spacing
14.-17. Abutments
18.-19. Soil Borings

TOTAL BILL OF MATERIAL

ITEM	UNIT	SUPER	SUB	TOTAL
Porous Granular Embankment	Cu. Yd.		712	712
Stone Riprap, Class A4	Sq. Yd.		240	240
Filter Fabric	Sq. Yd.		240	240
Removal of Existing Structures	Each		1	1
Concrete Structures	Cu. Yd.		214	214
Concrete Superstructures	Cu. Yd.	8.6		8.6
Precast Prestressed Concrete Deck Beams (21" Depth)	Sq. Ft.	1,145		1,145
Reinf. Bars, Epoxy Coated	Pound	500	35540	36040
Steel Railing, Type IL-0H	Foot	36		36
Bicycle Railing	Foot	75		75
Name Plates	Each		1	1
Waterproofing Membrane System	Sq. Yd.	127		127
Portland Cement Mortar Fairing Course	Foot	343		343
Geocomposite Wall Drain	Sq. Yd.		162	162

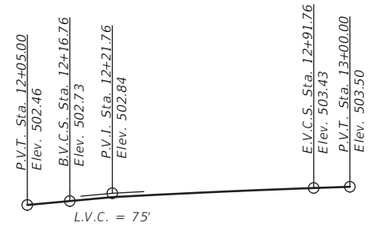

POST STREET PROFILE GRADE
(Along ℄ Roadway)

STA. 12+54.80
BUILT 20-- BY
CITY OF OTTAWA
SEC. 25-00177-00-BR
LOADING HL-93
STR. NO. 050-7406

NAME PLATE
See Std. 515001

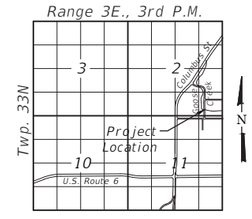

LOCATION SKETCH

DESIGN SCOUR ELEVATION TABLE

Event/Limit State	Design Scour Elevations (ft.)		Item 113
	S. Abut.	N. Abut.	
Q100	490.56	491.23	8
Q200	490.10	490.77	
Design	487.00	489.17	
Check	487.00	489.17	

Design and check elevations for abutments on spread footings taken as bottom of footing per IDOT BM Table 2.3.6.3.2-A.

10-23-2026
date

LICENSED STRUCTURAL ENGINEER NO. 081-006073 JORGE L. SANCHEZ STATE OF ILLINOIS
expires 11-30-2026
signature
PROFESSIONAL DESIGN FIRM LICENSE NO. 184-001717

I certify that to the best of knowledge, information and belief, this bridge design is structurally adequate for the design loading shown on the plans. The design is an economical one for the style of structure and complies with requirements of the current "AASHTO LRFD Bridge Design Specifications".

GENERAL PLAN AND ELEVATION
POST STREET (MUN 6610C)
OVER GOOSE CREEK
SEC. 25-00177-00-BR
LASALLE COUNTY
STATION 12+54.80
S.N. 050-7401 (EXIST)
S.N. 050-7406 (PROP)

CHAMLIN & ASSOCIATES, INC. © 2024
Drawing Name: R:\USERS\1 - STRUCTURAL\111641.01 - Ottawa Post St. Bridge Repl Design Ph II\CAD\PLANS\111641.01-010-GPE.dwg
Last Modified: Thursday, October 22, 2026 3:21:37 PM Plotted On: Thursday, October 22, 2026 3:22:25 PM by Kurt Decker

DRAWN BY: KED
CHECKED BY: JLS
DATE: 02/2026

REVISIONS			
LEVEL	BY	DATE	DESCRIPTION

Chamlin & Associates
PERU MORRIS OTTAWA ILLINOIS

POST STREET BRIDGE REPLACEMENT
SECTION 25-00177-00-BR
LASALLE COUNTY

GENERAL PLAN AND ELEVATION
S.N. 050-7401 (E) S.N. 050-7406 (P)
SHEET 1 of 19 SHEETS

BID SET

CURRENT AS OF: 10/20/2026
SCALE: AS NOTED | SHEET 10
FILE NO.: 111641.01 Y- | OF 28

CHAMLIN & ASSOCIATES, INC. © 2024
Drawing Name: R:\USERS\1 - STRUCTURAL\111641.01 - Ottawa Post St. Bridge Repl Design Ph II\CAD\PLANS\111641.01-011-RIPRAP.dwg Last Modified: Wednesday, October 21, 2026 10:03:20 AM Plotted On: Thursday, October 22, 2026 4:13:36 PM by Kurt Decker

F.A.S. RTE.	SECTION	COUNTY	TOTAL SHEETS	SHEET NO.
----	25-00177-00-BR	LASALLE	28	11
	--- ILLINOIS	CONTRACT NO. L0C16		

GRAPHIC SCALE
0 5 10
(IN FEET)

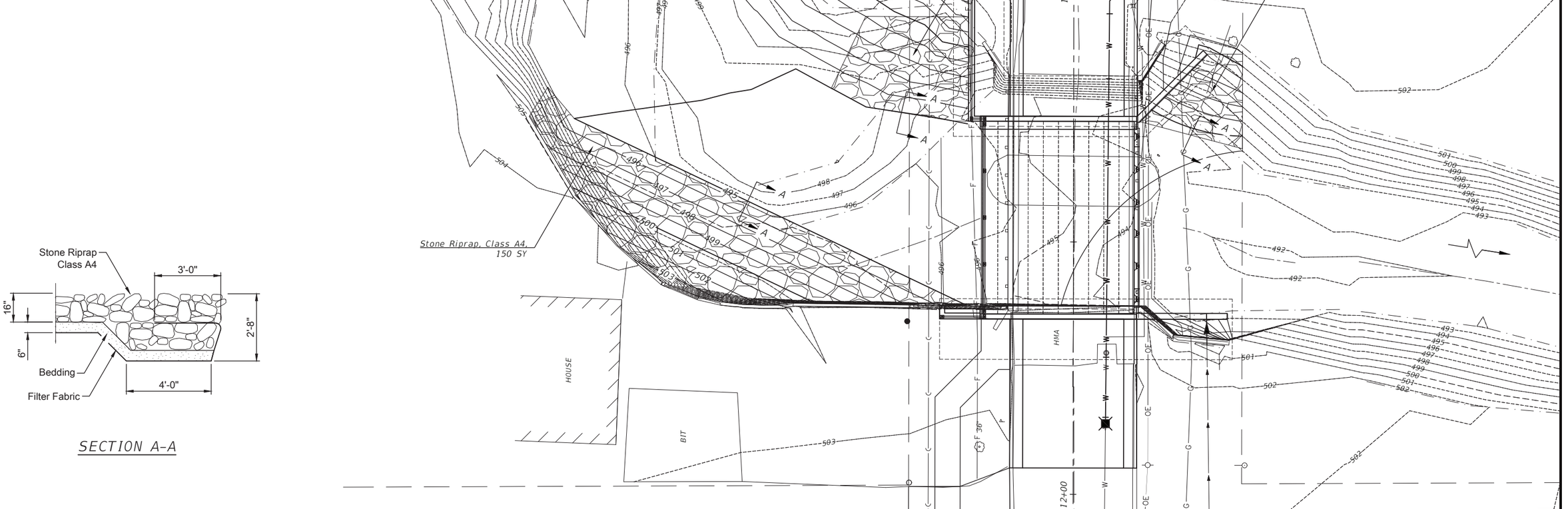

SECTION A-A

DRAWN BY: KED	REVISIONS			
CHECKED BY: JLS	LEVEL	BY	DATE	DESCRIPTION
DATE: 02/2026				

Chamlin & Associates
PERU MORRIS OTTAWA
ILLINOIS

POST STREET BRIDGE REPLACEMENT
SECTION 25-00177-00-BR
LASALLE COUNTY

RIPRAP DETAILS
S.N. 050-7401 (E) S.N. 050-7406 (P)
SHEET 2 of 19 SHEETS

BID SET

CURRENT AS OF: 10/20/2026	
SCALE: AS NOTED	SHEET 11
FILE NO.: 111641.01 Y–	OF 28

F.A.S. RTE.	SECTION	COUNTY	TOTAL SHEETS	SHEET NO.
----	25-00177-00-BR	LASALLE	28	12
	--- ILLINOIS	CONTRACT NO. L0C16		

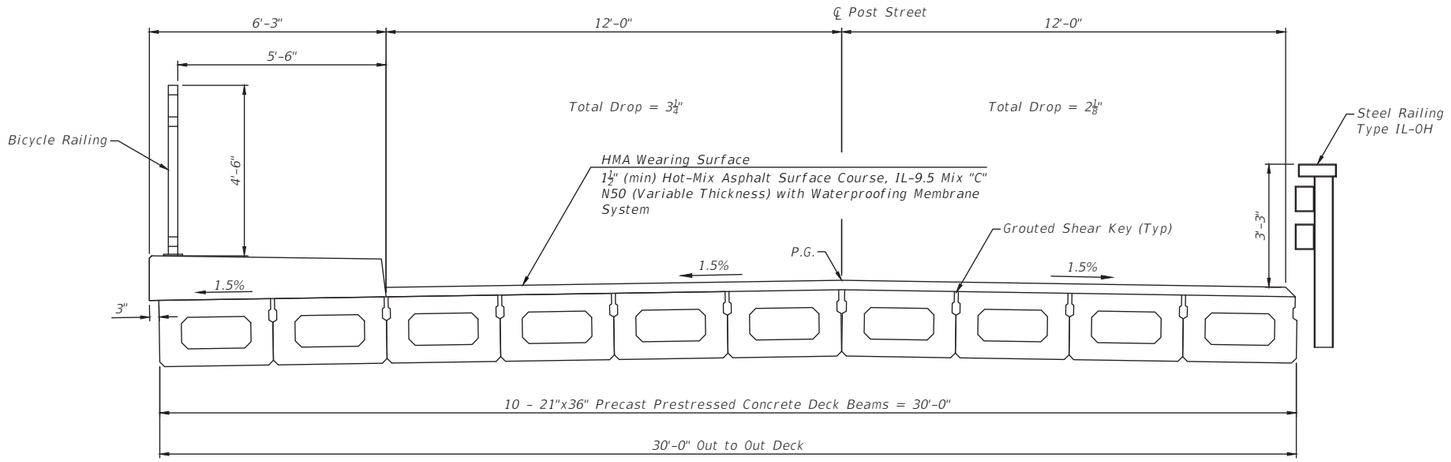

CROSS SECTION

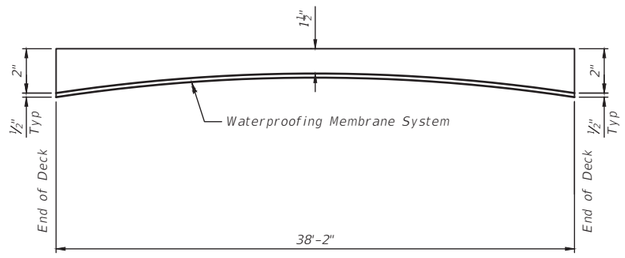

ANTICIPATED HMA WEARING SURFACE PROFILE

(For Information Only - Beam Camber May Vary in Field)

CHAMLIN & ASSOCIATES, INC., © 2024
Drawing Name: R:\USERS\1 - STRUCTURAL\111641.01 - Ottawa Post St. Bridge Repl Design Ph II\CAD\PLANS\111641.01-012-SUPERSTRUCTURE 01.dwg Last Modified: Monday, August 31, 2026 4:13:23 PM Plotted On: Wednesday, October 21, 2026 10:45:33 AM by Kurt Decker

DRAWN BY: KED	REVISIONS			
CHECKED BY: JLS	LEVEL	BY	DATE	DESCRIPTION
DATE: 02/2026				

Chamlin & Associates
PERU MORRIS OTTAWA
ILLINOIS

POST STREET BRIDGE REPLACEMENT
SECTION 25-00177-00-BR
LASALLE COUNTY

SUPERSTRUCTURE
S.N. 050-7401 (E) S.N. 050-7406 (P)
SHEET 3 of 19 SHEETS

BID SET

CURRENT AS OF: 10/20/2026	
SCALE: AS NOTED	SHEET 12
FILE NO.: 111641.01 Y-	OF 28

F.A.S. RTE.	SECTION	COUNTY	TOTAL SHEETS	SHEET NO.
----	25-00177-00-BR	LASALLE	28	13
	--- ILLINOIS	CONTRACT NO. L0C16		

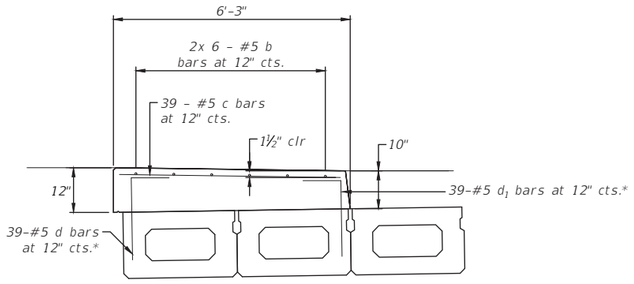

SECTION C

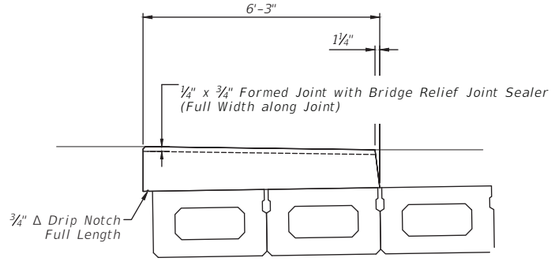

SIDEWALK DETAILS

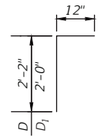

BARS D & D_1

* - These bars shall be cast with beams (Included in cost of Beams)

BILL OF MATERIALS

BAR	NO.	SIZE	LENGTH	SHAPE
b	12	#5	21'-4"	----
d*	39	#5	3'-2"	⌐
d_1*	39	#5	3'-0"	⌐
c	39	#5	5'-9"	----
REINFORCEMENT BARS, EPOXY COATED			POUND	500
CONCRETE SUPERSTRUCTURE			CU YD	8.6

(Not including d or d_1 bars)

CHAMLIN & ASSOCIATES, INC. © 2024
Drawing Name: R:\USERS\1 - STRUCTURAL\111641.01 - Ottawa Post St. Bridge Repl Design Ph II\CAD\PLANS\111641.01-013-SUPERSTRUCTURE 02.dwg Last Modified: Monday, August 31, 2026 4:13:12 PM Plotted On: Wednesday, October 21, 2026 10:46:13 AM by: Kurt Decker

DRAWN BY: KED	REVISIONS			
CHECKED BY: JLS	LEVEL	BY	DATE	DESCRIPTION
DATE: 02/2026				

Chamlin & Associates — PERU MORRIS OTTAWA ILLINOIS

POST STREET BRIDGE REPLACEMENT
SECTION 25-00177-00-BR
LASALLE COUNTY

SUPERSTRUCTURE
S.N. 050-7401 (E) S.N. 050-7406 (P)
SHEET 4 of 19 SHEETS

BID SET

CURRENT AS OF: **10/20/2026**
SCALE: AS NOTED | SHEET **13**
FILE NO.: 111641.01 Y– | OF **28**

F.A.S. RTE.	SECTION	COUNTY	TOTAL SHEETS	SHEET NO.
----	25-00177-00-BR	LASALLE	28	14
	--- ILLINOIS	CONTRACT NO. L0C16		

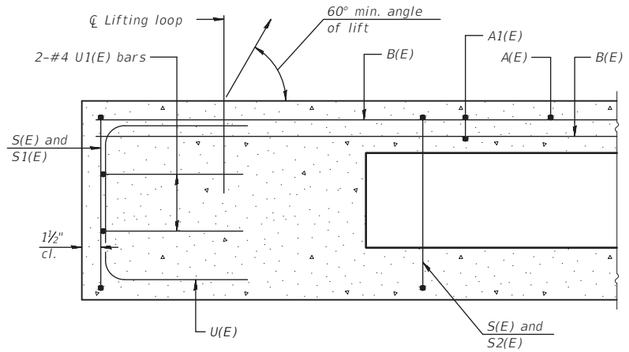

SECTION A-A

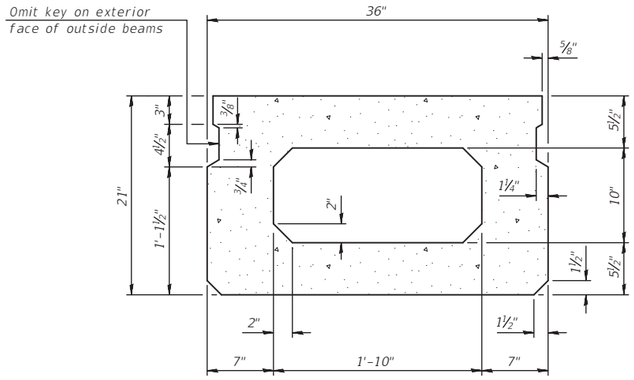

SECTION B-B
(Showing dimensions)

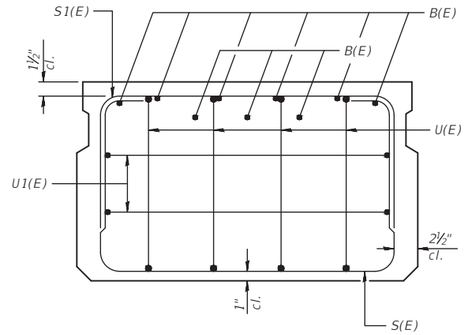

VIEW C-C

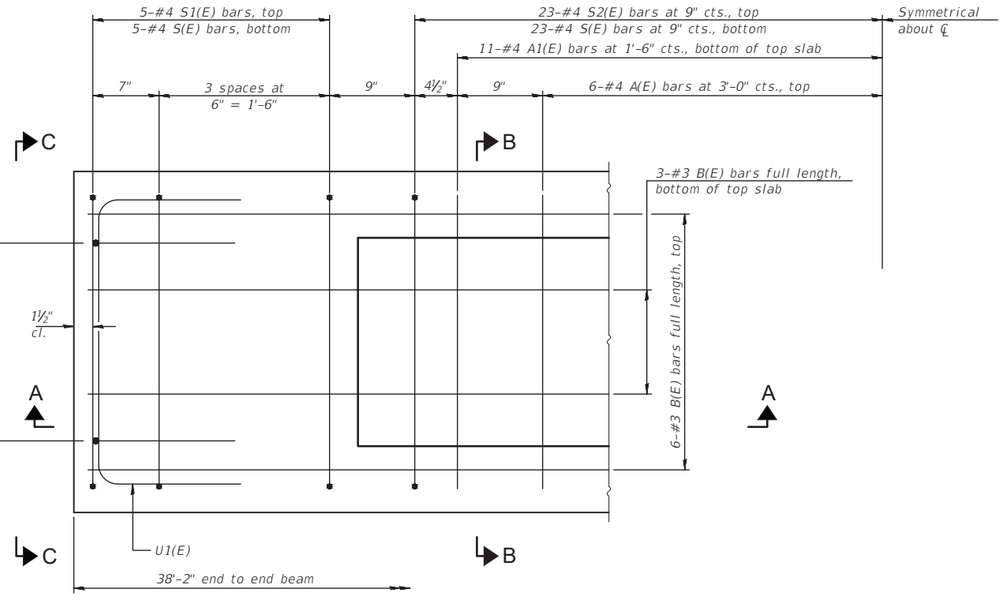

PLAN VIEW

Note:
Spacing of S(E) and S2(E) bars may be adjusted up to 4" in the immediate area of the transverse tie diaphragms to miss the block outs for the transverse ties.

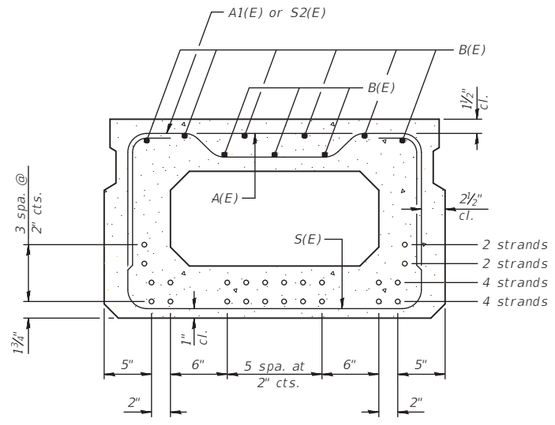

SECTION B-B
(Showing reinforcement and permissible strand locations)

Note:
Place the number of strands specified in each row symmetrically about the centerline of beam in the permissible strand locations shown.

Strand Pattern: SS12

MINIMUM BAR LAP
#3 bar = 1'-6"

BAR LIST
ONE BEAM ONLY
(For information only)

Bar	No.	Size	Length	Shape
A(E)	12	#4	2'-7"	——
A1(E)	22	#4	2'-10"	~~
B(E)	9	#3	37'-11"	——
S(E)	46	#4	6'-5"	⌴
S1(E)	10	#4	4'-11"	⌐¬
S2(E)	46	#4	5'-2"	⌐⌙¬
U(E)	8	#5	4'-0"	⊏
U1(E)	4	#4	5'-0"	⌐¬

Note:
See sheet 15 of 28 for additional details and Bill of Material.
See sheet 13 of 28 for additional details for beams under sidewalk.

CHAMLIN & ASSOCIATES, INC. © 2024
Drawing Name: P:\USERS\1 - STRUCTURAL\111641.01 - Ottawa Post St. Bridge Repl Design Ph I\CAD\PLANS\111641.01-014-BEAM.dwg Last Modified: Monday, August 31, 2026 4:13:02 PM Plotted On: Wednesday, October 21, 2026 10:46:49 AM by Kurt Decker

DRAWN BY: KED	REVISIONS			
CHECKED BY: JLS	LEVEL	BY	DATE	DESCRIPTION
DATE: 02/2026				

Chamlin & Associates
PERU MORRIS OTTAWA
ILLINOIS

POST STREET BRIDGE REPLACEMENT
SECTION 25-00177-00-BR
LASALLE COUNTY

21"X36" PPC DECK BEAM
S.N. 050-7401 (E) S.N. 050-7406 (P)
SHEET 5 of 19 SHEETS

BID SET

CURRENT AS OF: 10/20/2026	
SCALE: AS NOTED	SHEET 14
FILE NO.: 111641.01 Y–	OF 28

F.A.S. RTE.	SECTION	COUNTY	TOTAL SHEETS	SHEET NO.
----	25-00177-00-BR	LASALLE	28	15
	--- ILLINOIS	CONTRACT NO. L0C16		

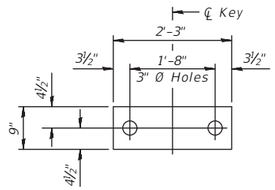

FABRIC BEARING PAD
(Interior - 18 required)

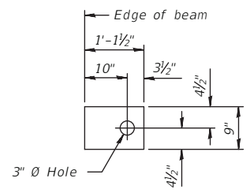

FABRIC BEARING PAD
(Exterior - 4 required)

FIXED

Notes:
All bearing pads shall be 1" thick.

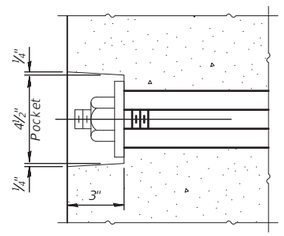

SECTION A-A

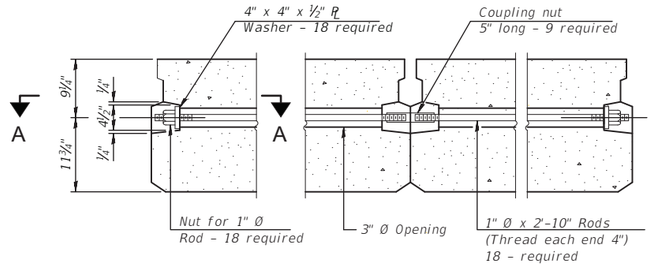

TYPICAL TRANSVERSE TIE ASSEMBLY

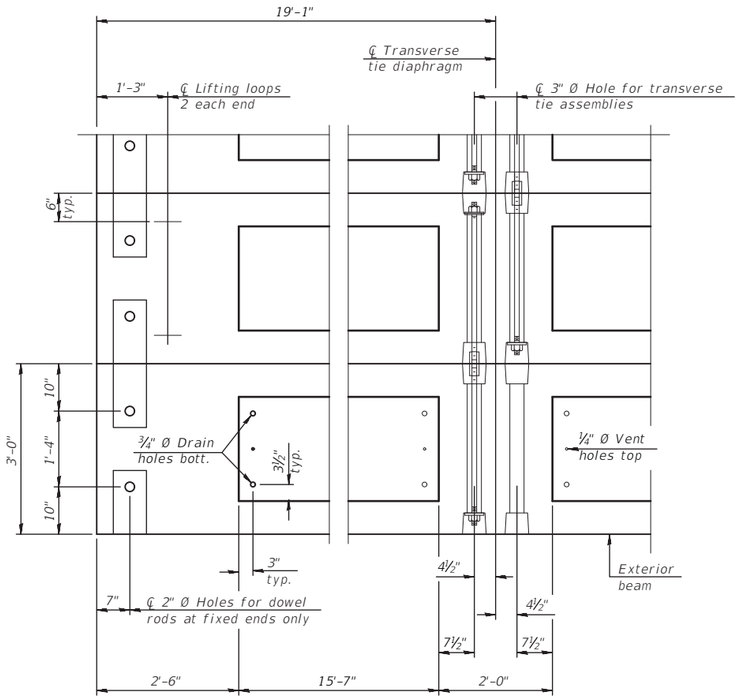

PLAN VIEW

Note:
Connect beams in pairs with the transverse tie configuration shown.

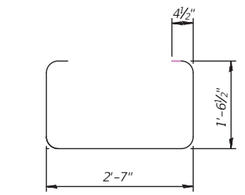

BAR S(E)

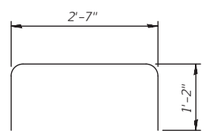

BAR S1(E)

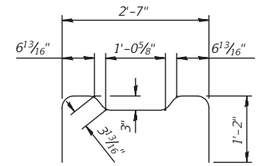

BAR S2(E)

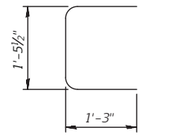

BAR U(E)

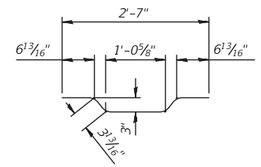

BAR A1(E)

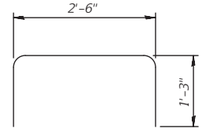

BAR U1(E)

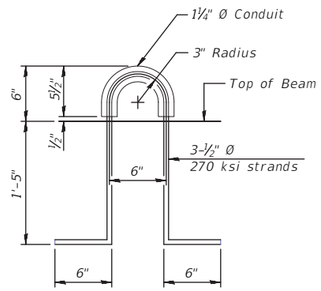

LIFTING LOOP DETAIL

NOTES

Prestressing steel shall be uncoated high strength, low relaxation 7-wire strand, Grade 270. The nominal diameter shall be ½" and the nominal cross-sectional area shall be 0.153 sq. in.

The 1" Ø rods in the transverse tie assembly shall be tightened to a snug fit and the threads set. Pockets on exterior faces of bridge shall be filled with grout after transverse tie assembly is in place.

Two ⅛" fabric adjusting shims of the dimensions of the exterior bearing pad shall be provided for each bearing pad location.

A minimum 2½" Ø lifting pin shall be used to engage the lifting loops during handling.

Corrosion Inhibitor, per Article 1020.05(b)(10) and 1021.07 of the Standard Specifications, shall be used in the concrete for precast prestressed concrete deck beams.

Compressive strength of prestressed concrete, f 'c, shall be 6000 psi.

Compressive strength of prestressed concrete at release, f 'ci, shall be 5000 psi.

BILL OF MATERIAL

Precast Prestressed Conc. Deck Bms. (21" depth)	Sq. Ft.	1145

CHAMLIN & ASSOCIATES, INC., © 2024
Drawing Name: R:\USERS\11 - STRUCTURAL\111641.01 - Ottawa Post St. Bridge Repl Design Ph II\CAD\PLANS\111641.01-015-BEAM DTLS.dwg Last Modified: Wednesday, October 21, 2026 10:48:02 AM Plotted On: Wednesday, October 21, 2026 2:39:22 PM by Kurt Decker

DRAWN BY: KED	REVISIONS			
CHECKED BY: JLS	LEVEL	BY	DATE	DESCRIPTION
DATE: 02/2026				

Chamlin & Associates
PERU MORRIS OTTAWA
ILLINOIS

POST STREET BRIDGE REPLACEMENT
SECTION 25-00177-00-BR
LASALLE COUNTY

21"X36" PPC DECK BEAM DETAILS
S.N. 050-7401 (E) S.N. 050-7406 (P)
SHEET 6 of 19 SHEETS

BID SET

CURRENT AS OF: 10/20/2026		
SCALE: AS NOTED	SHEET	15
FILE NO.:111641.01 Y-	OF	28

F.A.S. RTE.	SECTION	COUNTY	TOTAL SHEETS	SHEET NO.
----	25-00177-00-BR	LASALLE	28	16
	--- ILLINOIS	CONTRACT NO. L0C16		

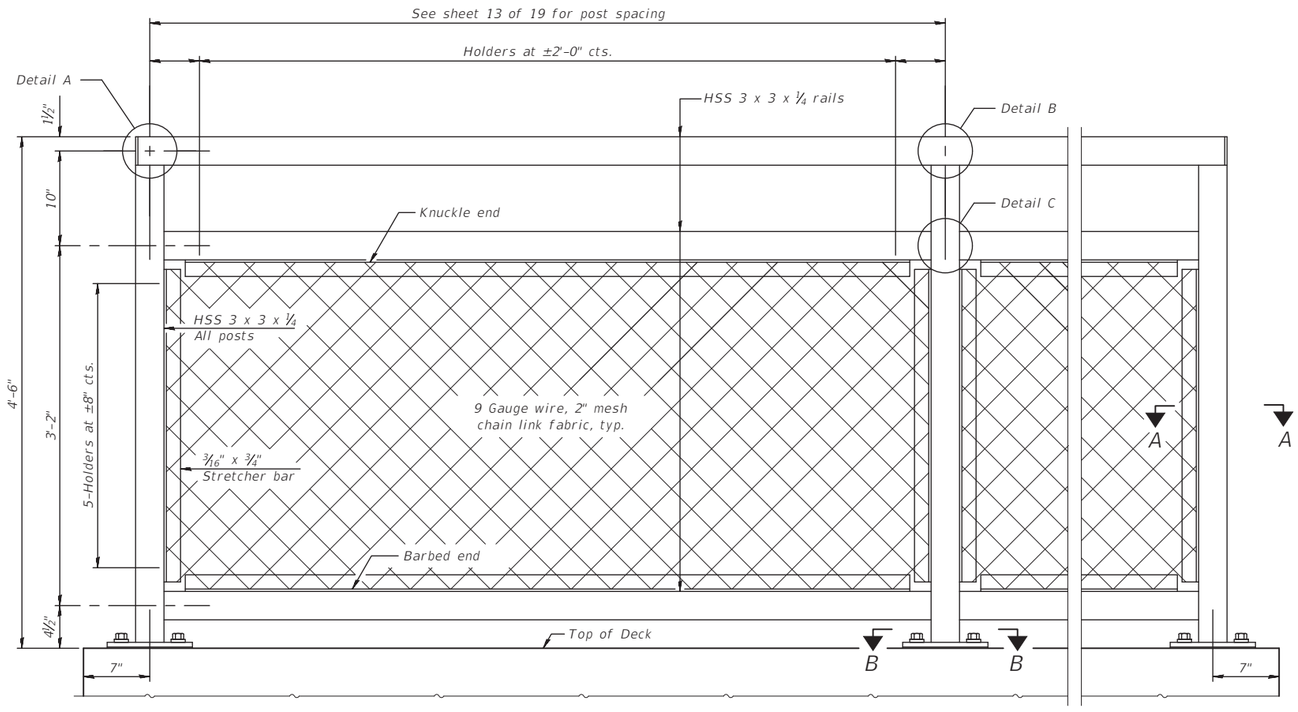

ELEVATION BICYCLE RAILING
(Inside face)

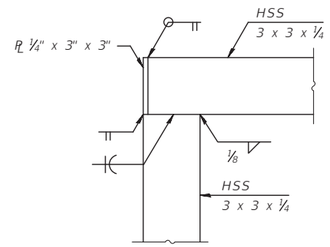

DETAIL A

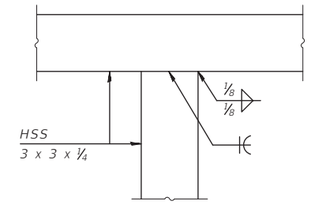

DETAIL B

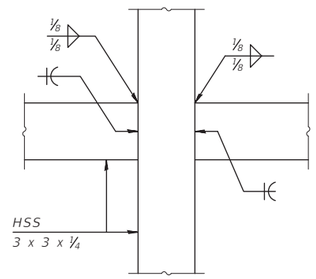

DETAIL C

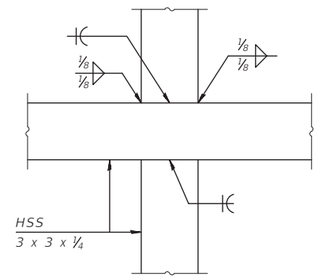

DETAIL D

RAILING CRITERIA

MASH 2016 Test Level	4
Parapet Railing Weight (plf)	25
Bicycle Railing Weight (plf)	50
Max Post Spacing	10'-0"

(SHEET 1 OF 2)

CHAMLIN & ASSOCIATES, INC. © 2024
Drawing Name: R:\USERS\11 - STRUCTURAL\111641.01 - Ottawa Post St. Bridge Repl. Design Ph II\CAD\PLANS\111641.01-016-BICYCLE RAIL 01.dwg Last Modified: Monday, August 31, 2026 4:12:41 PM Plotted On: Wednesday, October 21, 2026 10:49:25 AM by Kurt Decker

DRAWN BY: KED	REVISIONS			
CHECKED BY: JLS	LEVEL	BY	DATE	DESCRIPTION
DATE: 02/2026				

Chamlin & Associates
PERU MORRIS OTTAWA
ILLINOIS

POST STREET BRIDGE REPLACEMENT
SECTION 25-00177-00-BR
LASALLE COUNTY

BICYCLE RAILING
S.N. 050-7401 (E) S.N. 050-7406 (P)
SHEET 7 of 19 SHEETS

BID SET

CURRENT AS OF: 10/20/2026		
SCALE: AS NOTED	SHEET	16
FILE NO.: 111641.01 Y–	OF	28

F.A.S. RTE.	SECTION	COUNTY	TOTAL SHEETS	SHEET NO.
----	25-00177-00-BR	LASALLE	28	17
	--- ILLINOIS	CONTRACT NO. L0C16		

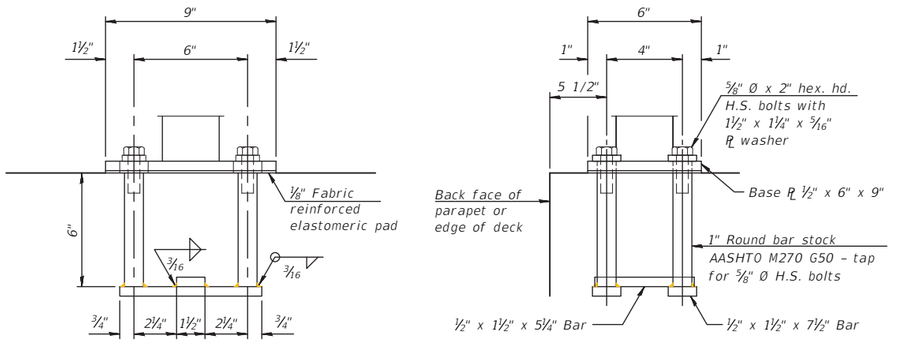

ANCHORAGE ASSEMBLY

The Bicycle Railing fasteners for end posts near expansion joints may need to be installed prior to installing the bent plates.

In lieu of the cast-in-place anchor device shown, the Contractor has the option of drilling and setting ⅝" Ø fully threaded anchor rods with the same plate washers as specified above and heavy hex lock nuts according to Article 509.06 of the Standard Specifications. Embedment shall be according to the manufacturer's specifications.

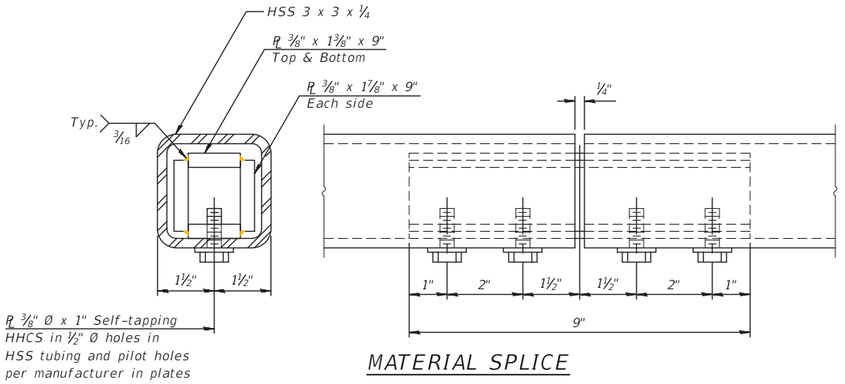

MATERIAL SPLICE

Notes:

Place reinforcement bars to miss anchor rod locations.

CVN testing is required for the HSS tubing used in the Bicycle Railing.

All heavy hex nuts shall be according to ASTM A 563 grade DH.

All fully threaded anchor rods shall be ASTM F1554 grade 105.

The post base plate shall be fastened to the curb snug tight and given an additional ⅛" turn.

Rail splice inserts may be built out of bent plates of the same thicknesses and outside geometry limits as the 4 plate rail splice inserts shown.

All steel rail elements shall be galvanized according to Article 509.05 of the Standard Specifications.

SECTION B-B

SECTION A-A

BILL OF MATERIAL

Item	Unit	Quantity
Bicycle Railing	Foot	75

DRAWN BY: KED	REVISIONS				PERU MORRIS OTTAWA ILLINOIS	POST STREET BRIDGE REPLACEMENT SECTION 25-00177-00-BR LASALLE COUNTY	BICYCLE RAILING S.N. 050-7401 (E) S.N. 050-7406 (P)	BID SET	CURRENT AS OF: 10/20/2026	
CHECKED BY: JLS	LEVEL	BY	DATE	DESCRIPTION			SHEET 8 of 19 SHEETS		SCALE: AS NOTED	SHEET 17
DATE: 02/2026									FILE NO.: 111641.01 Y–	OF 28

CHAMLIN & ASSOCIATES, INC. © 2024
Drawing Name: R:\USERS\1 - STRUCTURAL\111641.01 - Ottawa Post St. Bridge Repl Design Ph II\CAD\PLANS\111641.01-017-BICYCLE RAIL 02.dwg Last Modified: Wednesday, October 21, 2026 10:51:51 AM Plotted On: Wednesday, October 21, 2026 2:40:18 PM by Kurt Decker

F.A.S. RTE.	SECTION	COUNTY	TOTAL SHEETS	SHEET NO.
----	25-00177-00-BR	LASALLE	28	18
	--- ILLINOIS	CONTRACT NO. L0C16		

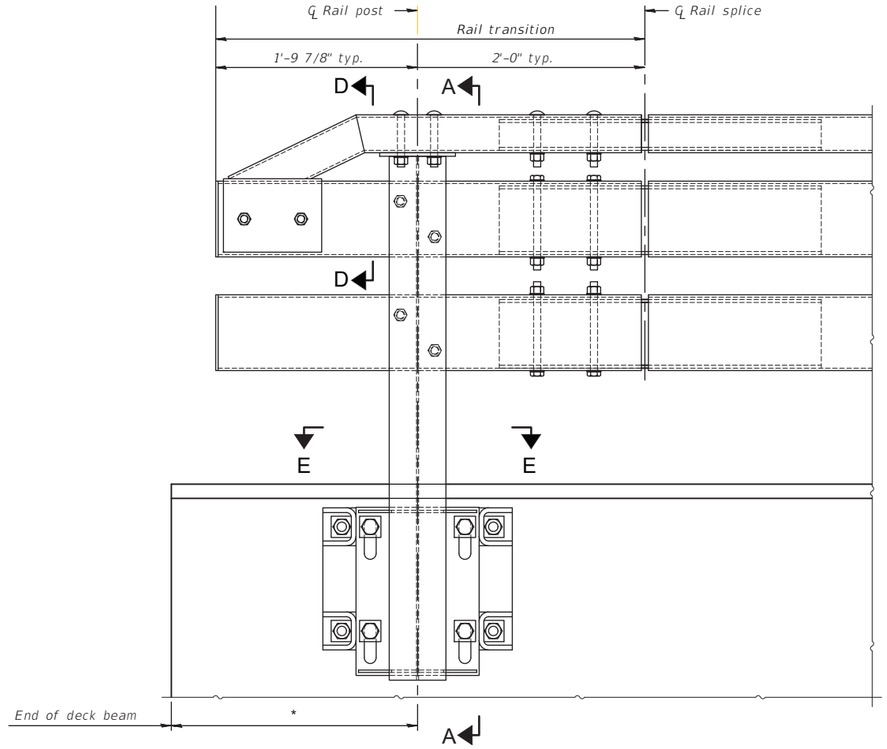

OUTSIDE ELEVATION OF RAIL

*3'-0" at abutments; 3'-0" min. at piers

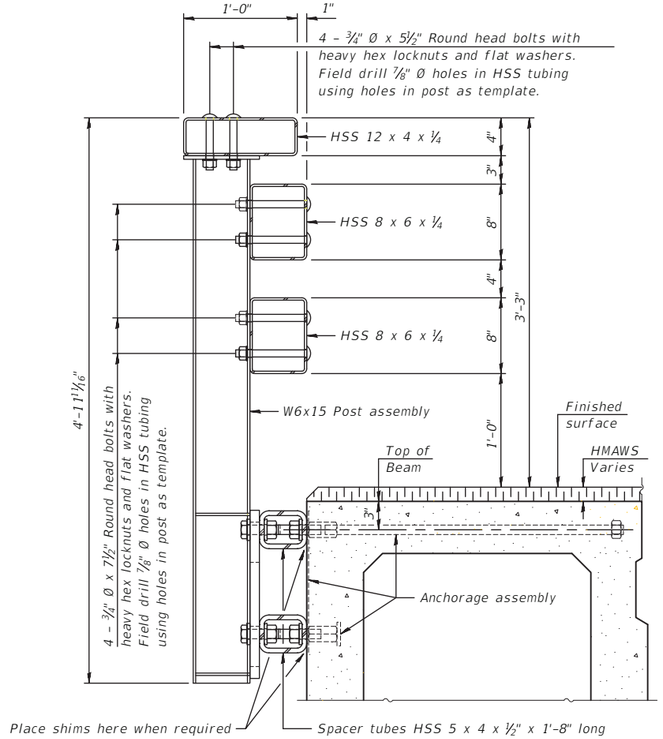

SECTION A-A

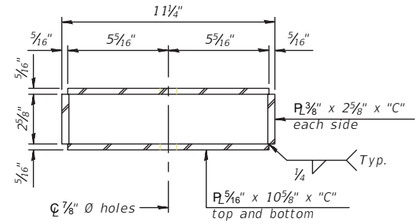

SECTION B-B

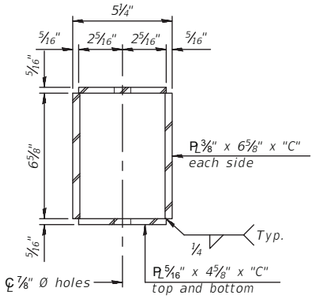

SECTION C-C

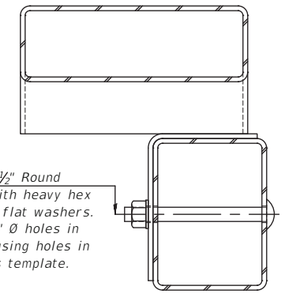

SECTION D-D

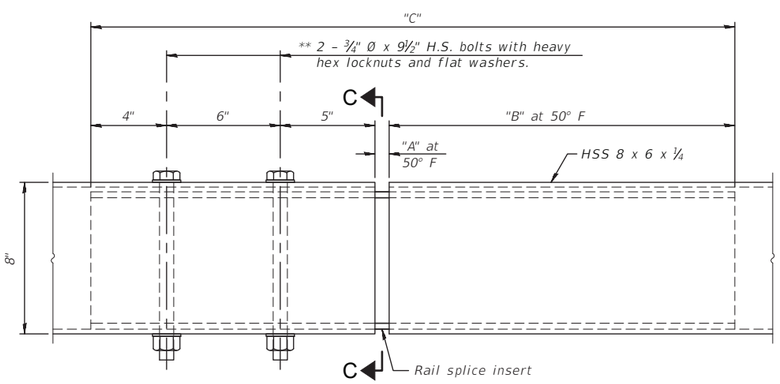

MIDDLE & BOTTOM RAIL SPLICE ELEVATION

**Bolt orientation shown for middle rail. Flip for bottom rail.

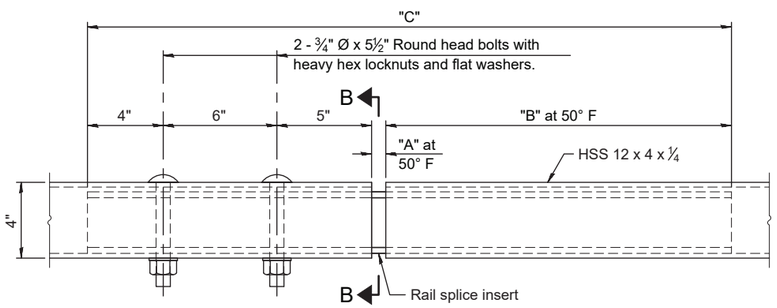

TOP RAIL SPLICE ELEVATION

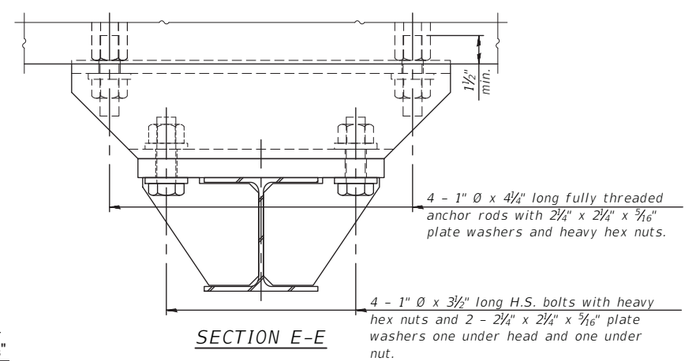

SECTION E-E

SPLICE DIMENSIONS

Location	T	A	B	C
All locs. not over exp. jts.	0	½"	1'-6"	2'-9½"
Over Strip Seal Jt.	≤4"	2½"	1'-8"	3'-1½"

T = total movement along centerline of roadway at expansion joint.

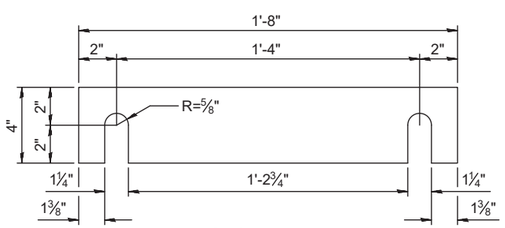

SHIM PLATE

(SHEET 1 OF 4)

CHAMLIN & ASSOCIATES, INC. © 2024
Drawing Name: K:\USERS\1 - STRUCTURAL\111641.01 - Ottawa Post St. Bridge Repl Design Ph II\CAD\PLANS\111641.01-018-RAILING 01.dwg Last Modified: Wednesday, October 21, 2026 10:58:55 AM Plotted On: Wednesday, October 21, 2026 2:35:26 PM by Kurt Decker

DRAWN BY: KED	REVISIONS			
CHECKED BY: JLS	LEVEL	BY	DATE	DESCRIPTION
DATE: 02/2026				

Chamlin & Associates
PERU MORRIS OTTAWA ILLINOIS

POST STREET BRIDGE REPLACEMENT
SECTION 25-00177-00-BR
LASALLE COUNTY

STEEL RAILING, TYPE IL-OH
S.N. 050-7401 (E) S.N. 050-7406 (P)
SHEET 9 of 19 SHEETS

BID SET

CURRENT AS OF: 10/20/2026		
SCALE: AS NOTED	SHEET	18
FILE NO.:111641.01 Y–	OF	28

F.A.S. RTE.	SECTION	COUNTY	TOTAL SHEETS	SHEET NO.
----	25-00177-00-BR	LASALLE	28	19
	--- ILLINOIS	CONTRACT NO. L0C16		

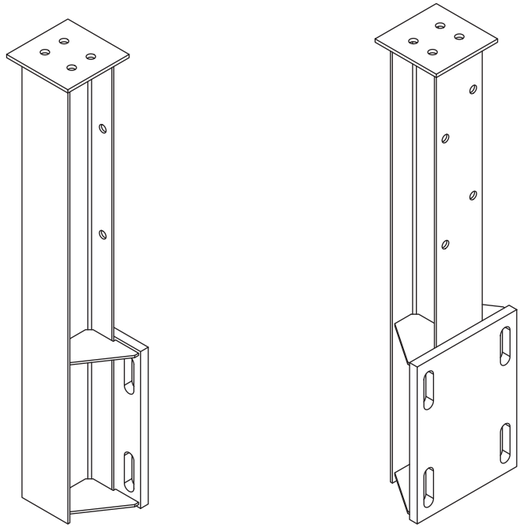

ISOMETRIC VIEWS POST ASSEMBLY

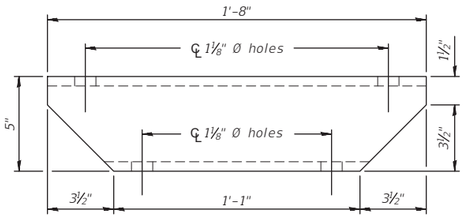

SPACER TUBE PLAN

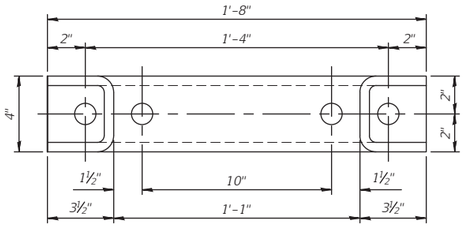

SPACER TUBE ELEVATION

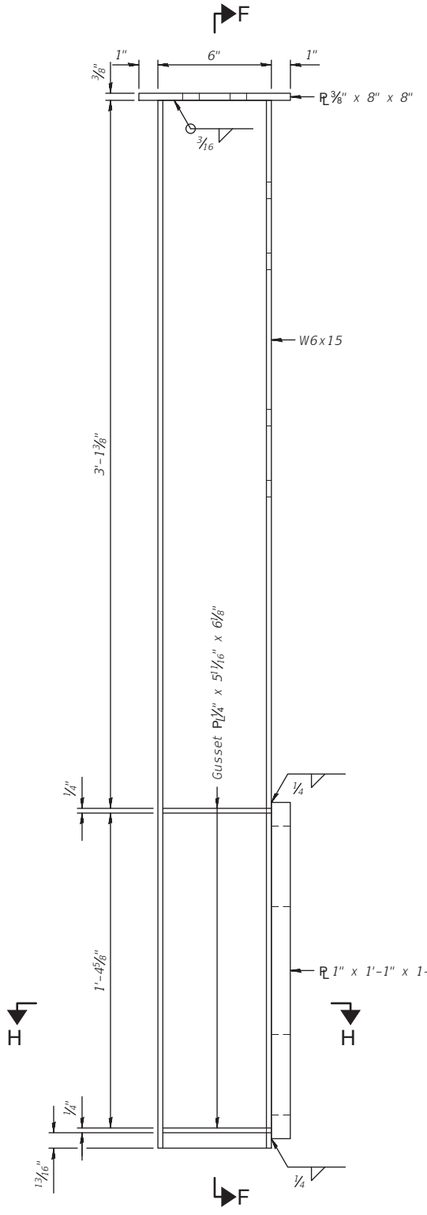

SIDE ELEVATION POST ASSEMBLY

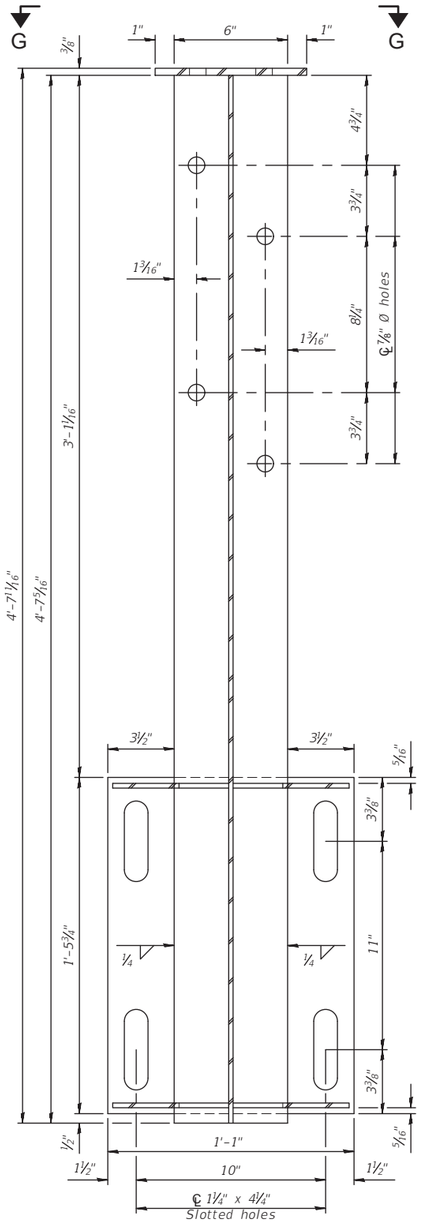

SECTION F-F

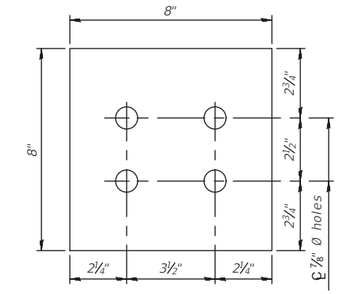

VIEW G-G
(Showing top plate)

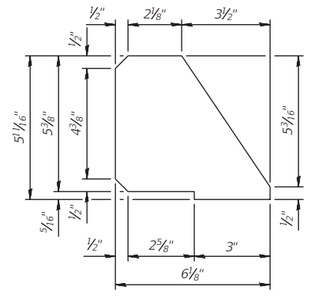

GUSSET PLATE

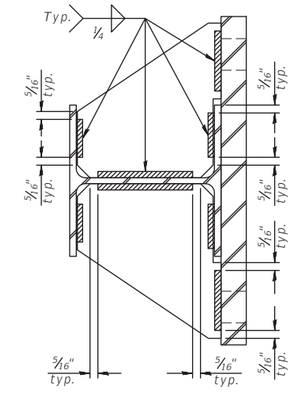

SECTION H-H
(Showing gusset plate welds)

(SHEET 2 OF 4)

CHAMLIN & ASSOCIATES, INC. © 2024
Drawing Name: E:\USERS\11 - STRUCTURAL\111641.01 - Ottawa Post St. Bridge Repl Design Ph II\CAD\PLANS\111641.01-019-RAILING 02.dwg Last Modified: Monday, August 31, 2026 4:12:04 PM Plotted On: Wednesday, October 21, 2026 10:59:17 AM by Kurt Decker

DRAWN BY: KED	REVISIONS			
CHECKED BY: JLS	LEVEL	BY	DATE	DESCRIPTION
DATE: 02/2026				

Chamlin & Associates
PERU MORRIS OTTAWA
ILLINOIS

POST STREET BRIDGE REPLACEMENT
SECTION 25-00177-00-BR
LASALLE COUNTY

STEEL RAILING, TYPE IL-OH
S.N. 050-7401 (E) S.N. 050-7406 (P)
SHEET 10 of 19 SHEETS

BID SET

CURRENT AS OF: 10/20/2026		
SCALE: AS NOTED	SHEET	19
FILE NO.: 111641.01 Y–	OF	28

F.A.S. RTE.	SECTION	COUNTY	TOTAL SHEETS	SHEET NO.
----	25-00177-00-BR	LASALLE	28	20
	--- ILLINOIS	CONTRACT NO. L0C16		

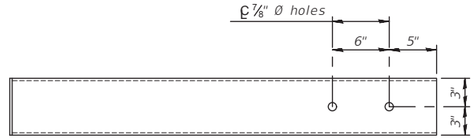

PLAN OF MIDDLE AND BOTTOM RAIL TRANSITION

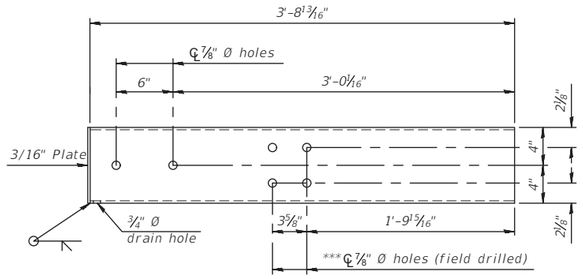

INSIDE ELEVATION OF LEFT MIDDLE RAIL TRANSITION

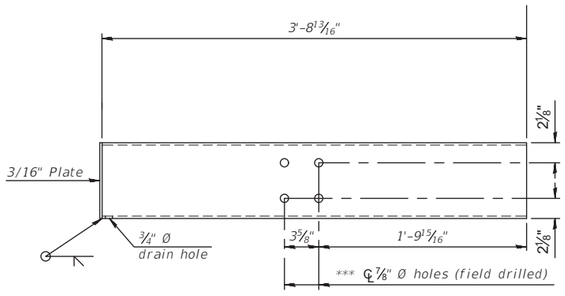

INSIDE ELEVATION OF LEFT BOTTOM RAIL TRANSITION

*** Hole orientation is flipped as shown with the dashed holes for the right side piece.

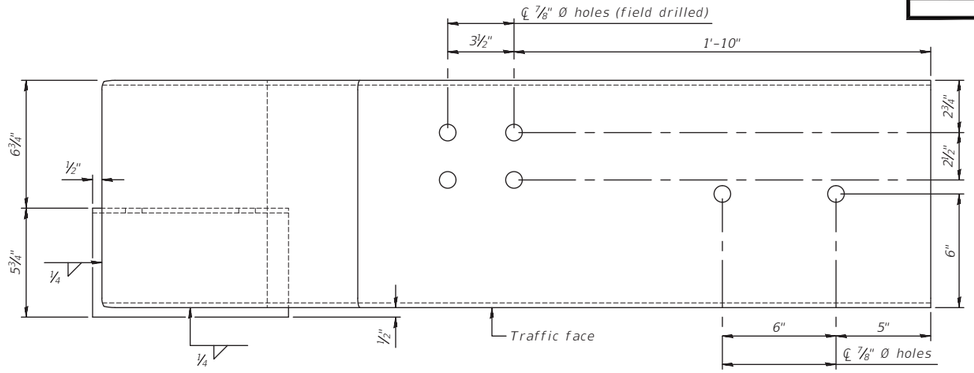

PLAN OF LEFT TOP RAIL TERMINATION ASSEMBLY

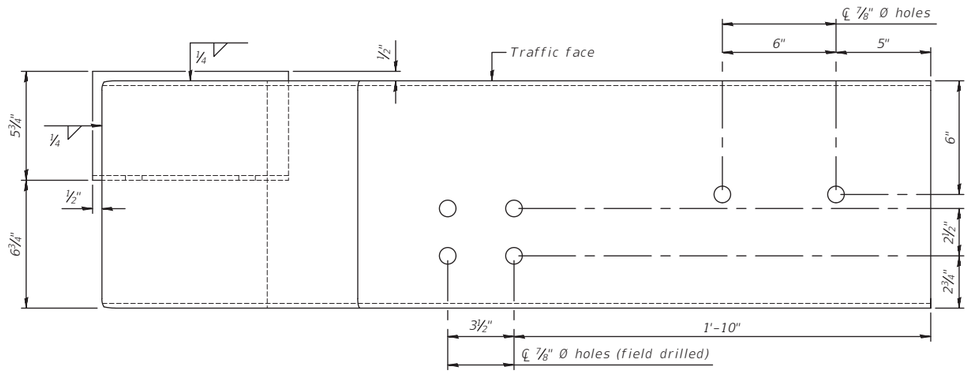

PLAN OF RIGHT TOP RAIL TERMINATION ASSEMBLY

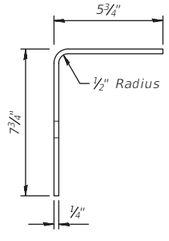

VIEW I-I

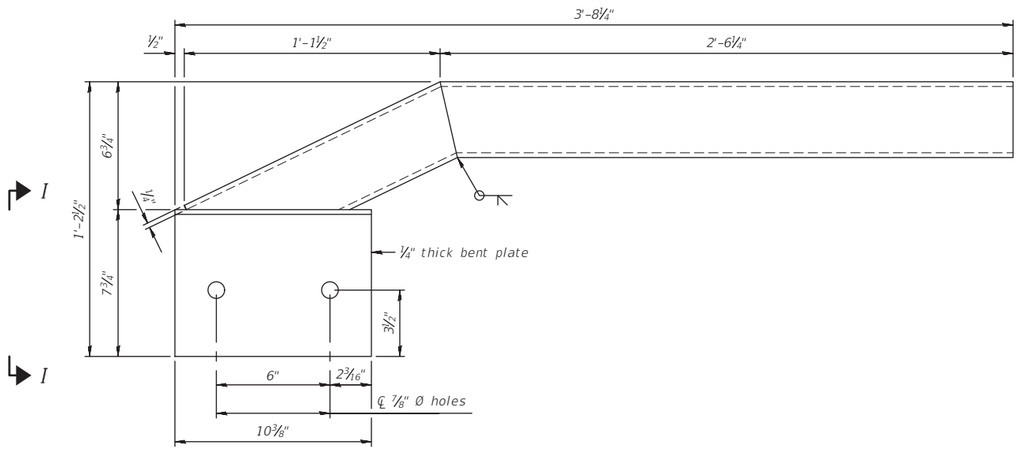

INSIDE ELEVATION OF LEFT TOP RAIL TERMINATION ASSEMBLY

(Right Similar)

(SHEET 3 OF 4)

CHAMLIN & ASSOCIATES, INC. © 2024
Drawing Name: K:\USERS\1 - STRUCTURAL\111641.01 - Ottawa Post St. Bridge Repl Design Ph II\CAD\PLANS\111641.01-020-RAILING 03.dwg Last Modified: Monday, August 31, 2026 4:11:52 PM Plotted On: Wednesday, October 21, 2026 11:00:02 AM by Kurt Decker

DRAWN BY: KED	REVISIONS			
CHECKED BY: JLS	LEVEL	BY	DATE	DESCRIPTION
DATE: 02/2026				

Chamlin & Associates

PERU MORRIS OTTAWA
ILLINOIS

POST STREET BRIDGE REPLACEMENT
SECTION 25-00177-00-BR
LASALLE COUNTY

STEEL RAILING, TYPE IL-OH
S.N. 050-7401 (E) S.N. 050-7406 (P)

SHEET 11 of 19 SHEETS

BID SET

CURRENT AS OF: 10/20/2026		
SCALE: AS NOTED	SHEET	20
FILE NO.: 111641.01 Y–	OF	28

F.A.S. RTE.	SECTION	COUNTY	TOTAL SHEETS	SHEET NO.
----	25-00177-00-BR	LASALLE	28	21
	--- ILLINOIS	CONTRACT NO. L0C16		

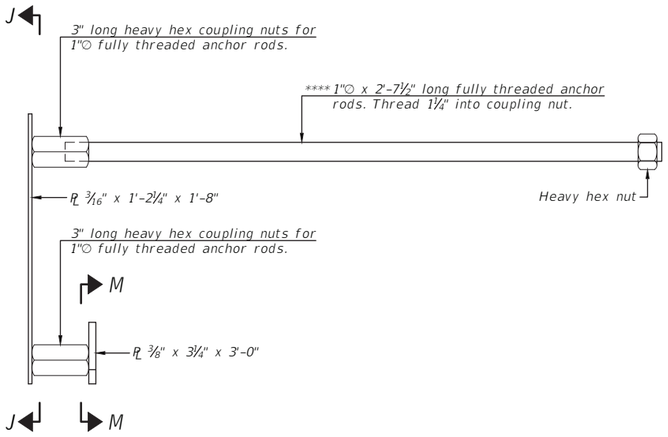

ANCHORAGE ASSEMBLY

(for 17" deck beams)

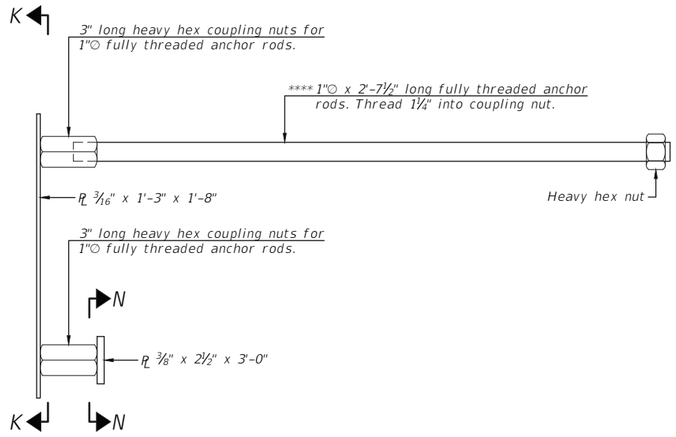

**** For skewed deck beams use 1" Ø x 1'-3" long fully threaded anchor rods at acute corners of beam ends.

ANCHORAGE ASSEMBLY

(for 21" thru 42" deck beams)

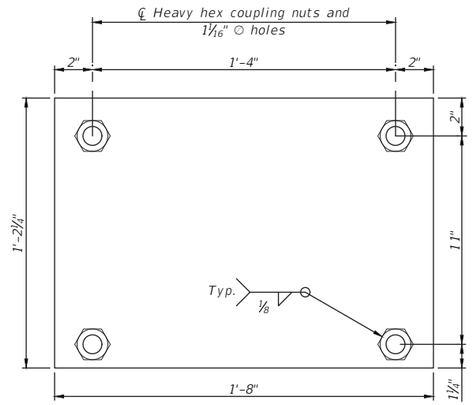

SECTION J-J

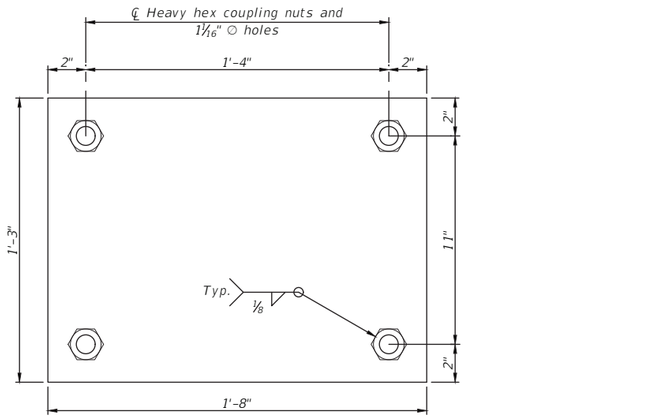

SECTION K-K

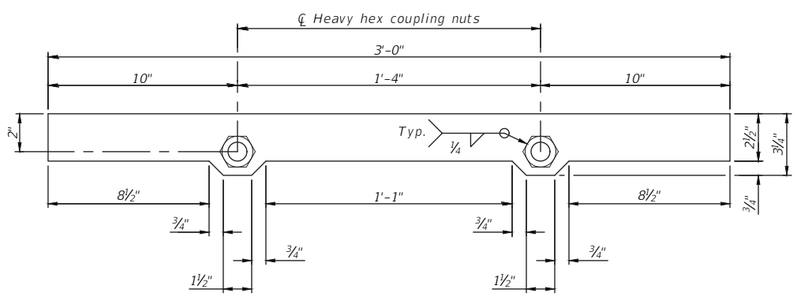

SECTION M-M

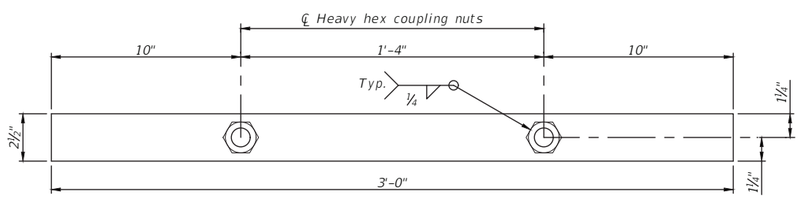

SECTION N-N

Notes:

All plates shall be AASHTO M270 grade 50.

All HSS tubing shall be ASTM A500 grade C.

All heavy hex nuts including heavy hex coupling nuts shall be according to ASTM A563 grade DH.

All fully threaded anchor rods shall be ASTM F1554 grade 105.

All round head bolts shall be ASTM A449.

All steel rail elements including shims shall be galvanized according to Article 509.05 of the Standard Specifications.

Rail splice inserts may be built out of 2 - ⅜" bent plates in lieu of the 4 plate rail splice inserts shown, provided the outside dimensions are matched.

One ³⁄₁₆" thick shim per post and a sufficient number of shims of various thicknesses, built to the dimensions shown in the shim plate detail, shall be provided to adjust posts for plumbness and horizontal alignment. Cost included with Steel Railing, Type IL-0H.

The spacer tubes shall be fastened to the deck beams snug tight and given an additional ⅓ turn. The 1" diameter high strength bolts used to connect the spacer tubes to the post assemblies shall be tightened according to Article 505.04(f)(2) of the Standard Specifications.

All HSS tubing serving as railing shall be CVN tested according to Article 1006.34(b) of the Standard Specifications.

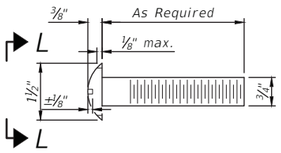

ROUND HEAD BOLT DETAIL

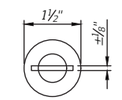

With Slot (shown) or Approved Recess

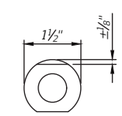

Without Slot or Recess

VIEW L-L

BILL OF MATERIAL

Item	Unit	Quantity
Steel Railing, Type IL-0H	Foot	36

(SHEET 4 OF 4)

DRAWN BY: KED	REVISIONS				PERU MORRIS OTTAWA ILLINOIS	POST STREET BRIDGE REPLACEMENT SECTION 25-00177-00-BR LASALLE COUNTY	STEEL RAILING, TYPE IL-0H S.N. 050-7401 (E) S.N. 050-7406 (P)	BID SET	CURRENT AS OF: 10/20/2026	
CHECKED BY: JLS	LEVEL	BY	DATE	DESCRIPTION			SHEET 12 of 19 SHEETS		SCALE: AS NOTED	SHEET 21
DATE: 02/2026									FILE NO.:111641.01 Y-	OF 28

CHAMLIN & ASSOCIATES, INC. © 2024
Drawing Name: K:\USERS\11 - STRUCTURAL\111641.01 - Ottawa Post St. Bridge Repl Design Ph II\CAD\PLANS\111641.01-021-RAILING 04.dwg Last Modified: Monday, August 31, 2026 4:11:40 PM Plotted On: Wednesday, October 21, 2026 11:07:18 AM by Kurt Decker

F.A.S. RTE.	SECTION	COUNTY	TOTAL SHEETS	SHEET NO.
----	25-00177-00-BR	LASALLE	28	22
	---- ILLINOIS	CONTRACT NO. L0C16		

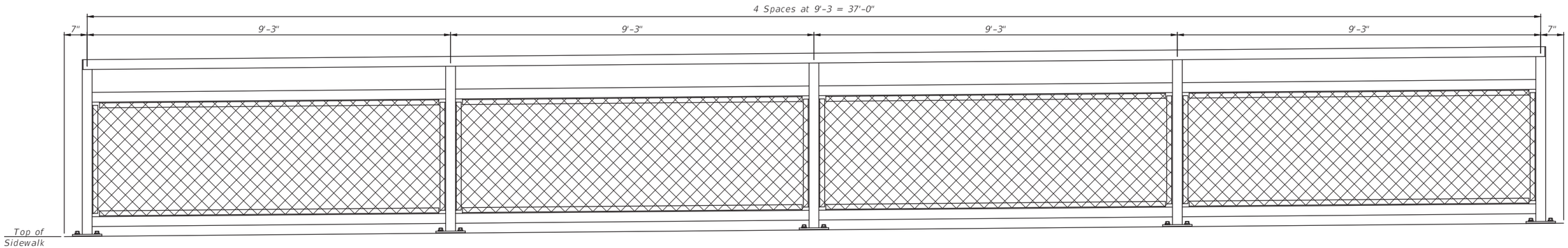

BICYCLE RAILING POST SPACING

(Looking West)

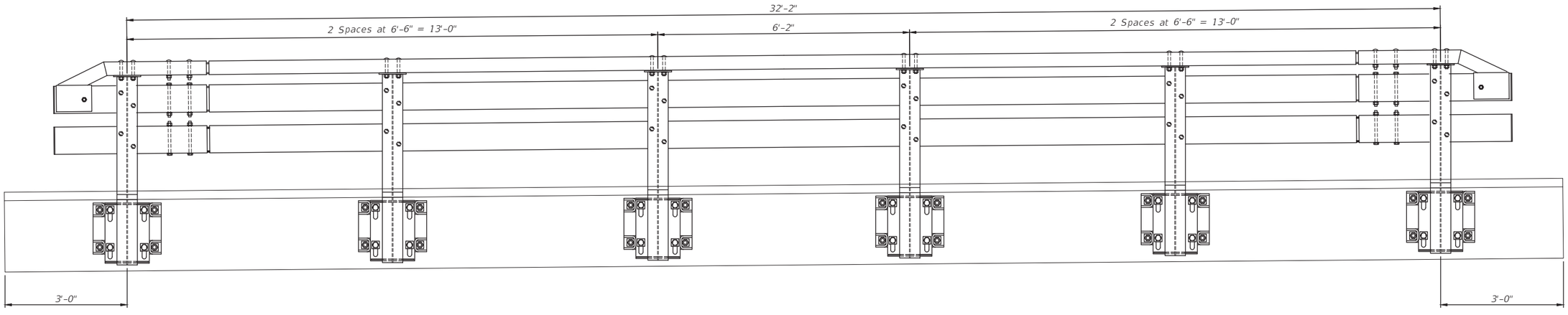

STEEL RAILING POST SPACING

(Looking West)

DRAWN BY: KED	REVISIONS				Chamlin & Associates	PERU MORRIS OTTAWA ILLINOIS	POST STREET BRIDGE REPLACEMENT SECTION 25-00177-00-BR LASALLE COUNTY	RAIL POST SPACING S.N. 050-7401 (E) S.N. 050-7406 (P)	BID SET	CURRENT AS OF: 10/20/2026	
CHECKED BY: JLS	LEVEL	BY	DATE	DESCRIPTION				SHEET 13 of 19 SHEETS		SCALE: AS NOTED	SHEET 22
DATE: 02/2026										FILE NO.: 111641.01 Y–	OF 28

CHAMLIN & ASSOCIATES, INC. © 2024
Drawing Name: R:\USERS\1 – STRUCTURAL\111641.01 – Ottawa Post St. Bridge Repl Design Ph I\CAD\PLANS\111641.01-022-RPS.dwg Last Modified: Monday, August 31, 2026 4:11:34 PM Plotted On: Wednesday, October 21, 2026 11:08:08 AM by Kurt Decker

F.A.S. RTE.	SECTION	COUNTY	TOTAL SHEETS	SHEET NO.
----	25-00177-00-BR	LASALLE	28	23
	--- ILLINOIS	CONTRACT NO. L0C16		

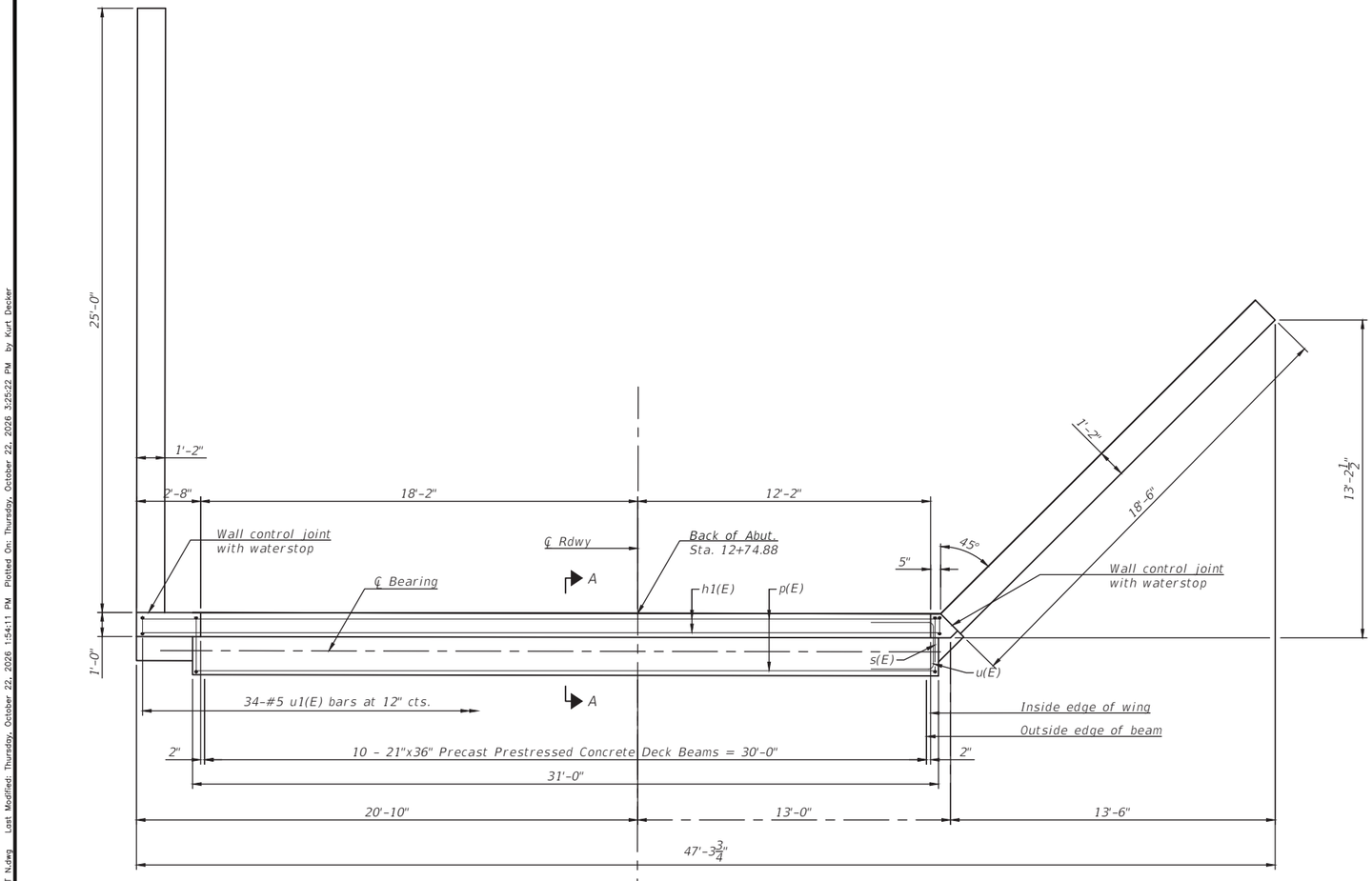

TOP PLAN

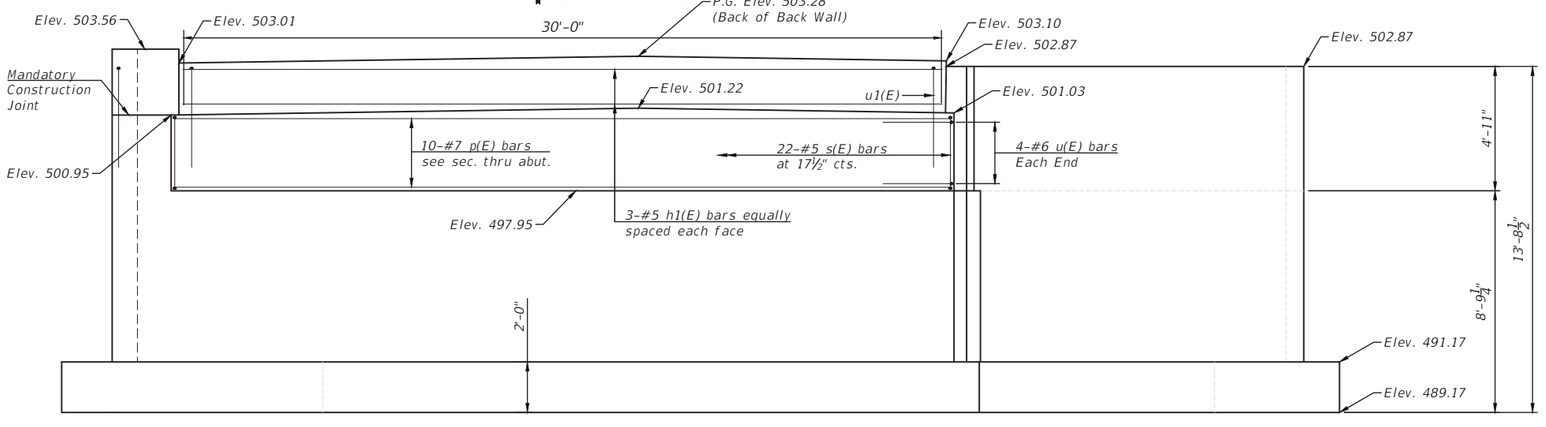

ELEVATION
(Looking North)

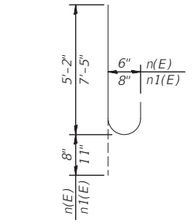

BARS n(E) & n1(E)

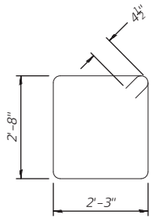

BAR s(E)

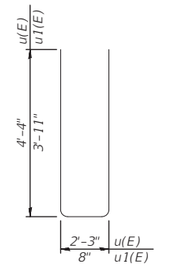

BARS u(E) & u1(E)

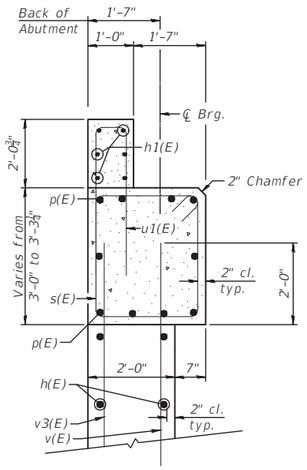

SECTION A-A

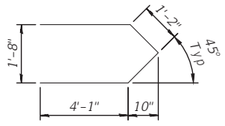

BAR u2(E)

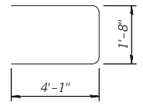

BAR u3(E)

BILL OF MATERIAL

Bar	No.	Size	Length	Shape
h(E)	14	#6	33'-0"	
h1(E)	6	#5	33'-1"	
h2(E)	24	#4	18'-2"	
h3(E)	26	#4	24'-8"	
n(E)	132	#6	5'-10"	
n1(E)	131	#8	8'-4"	
p(E)	10	#7	30'-8"	
s(E)	22	#5	10'-7"	
t(E)	82	#8	11'-8"	
t1(E)	106	#8	9'-8"	
u(E)	8	#6	10'-11"	
u1(E)	34	#5	8'-6"	
u2(E)	7	#5	10'-6"	
u3(E)	7	#5	8'-10"	
v(E)	39	#6	8'-7"	
v1(E)	38	#8	11'-4"	
v2(E)	38	#6	11'-4"	
v3(E)	38	#8	8'-7"	
v6(E)	51	#8	12'-0"	
v7(E)	51	#6	12'-0"	
w(E)	26	#5	31'-0"	
w1(E)	22	#5	20'-9"	
w2(E)	22	#5	21'-0"	
Structure Excavation			Cu. Yd.	425
Concrete Structures			Cu. Yd.	113
Reinforcement Bars, Epoxy Coated			Pound	19450

Notes:
Cast backwall and tops of wingwalls after beams have been erected.
Space reinforcement in cap to miss anchor bolts.

CHAMLIN & ASSOCIATES, INC. © 2024
Drawing Name: R:\USERS\11 - STRUCTURAL\111641.01 - Ottawa Post St. Bridge Repl. Design Ph II\CAD\PLANS\111641.01-023-ABUT N.dwg Last Modified: Thursday, October 22, 2026 1:54:11 PM Plotted On: Thursday, October 22, 2026 3:25:22 PM by Kurt Decker

DRAWN BY: KED
CHECKED BY: JLS
DATE: 02/2026

REVISIONS			
LEVEL	BY	DATE	DESCRIPTION

Chamlin & Associates
PERU MORRIS OTTAWA ILLINOIS

POST STREET BRIDGE REPLACEMENT
SECTION 25-00177-00-BR
LASALLE COUNTY

ABUTMENTS - NORTH
S.N. 050-7401 (E) S.N. 050-7406 (P)
SHEET 14 of 19 SHEETS

BID SET

CURRENT AS OF: 10/20/2026
SCALE: AS NOTED | SHEET 23
FILE NO.:111641.01 Y- | OF 28

F.A.S. RTE.	SECTION	COUNTY	TOTAL SHEETS	SHEET NO.
----	25-00177-00-BR	LASALLE	28	24
	---- ILLINOIS	CONTRACT NO. L0C16		

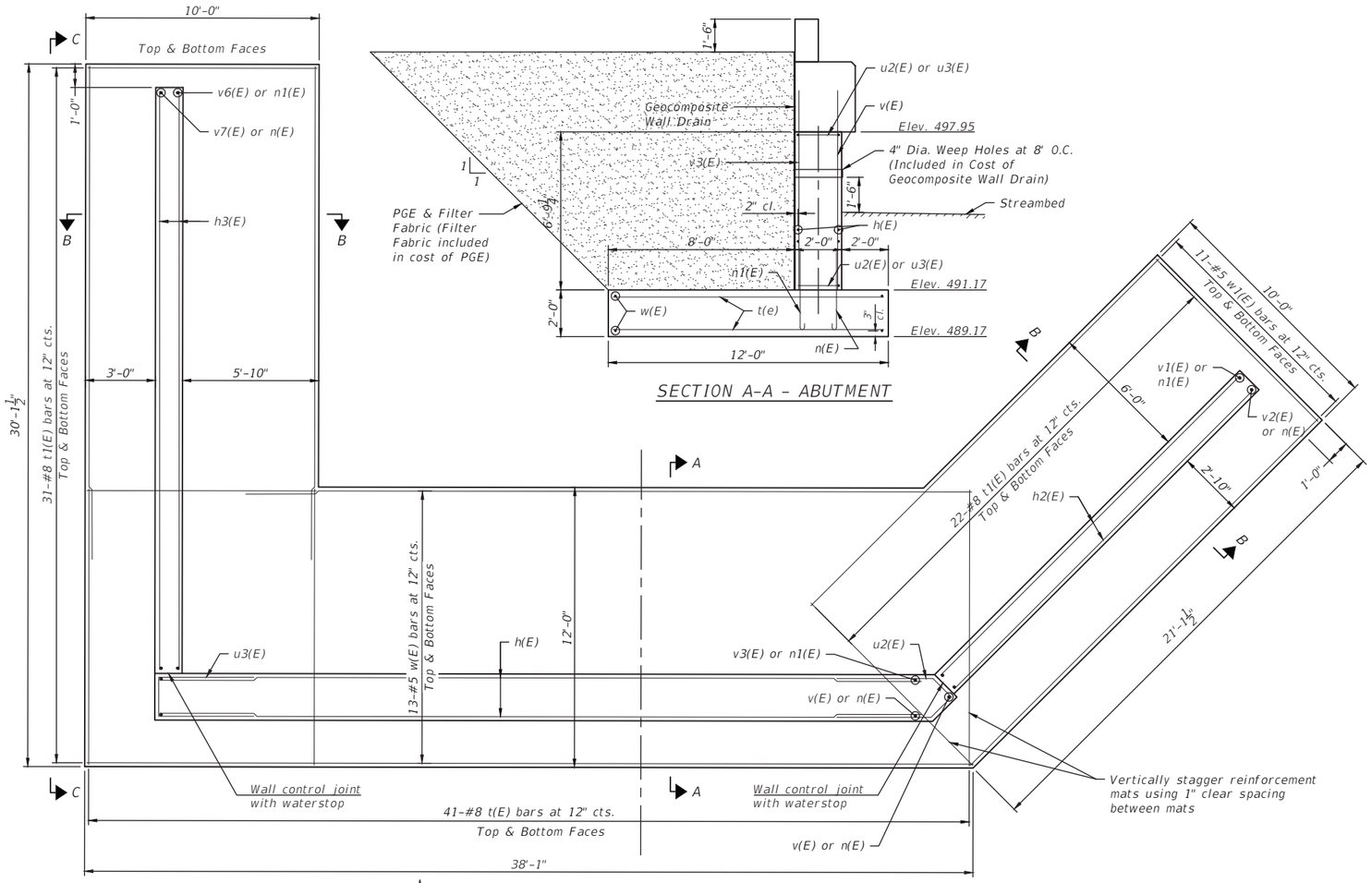

LOWER WALL AND FOOTING PLAN

#5 Horizontal Lap Length = 2'-9" Minimum

SECTION A-A - ABUTMENT

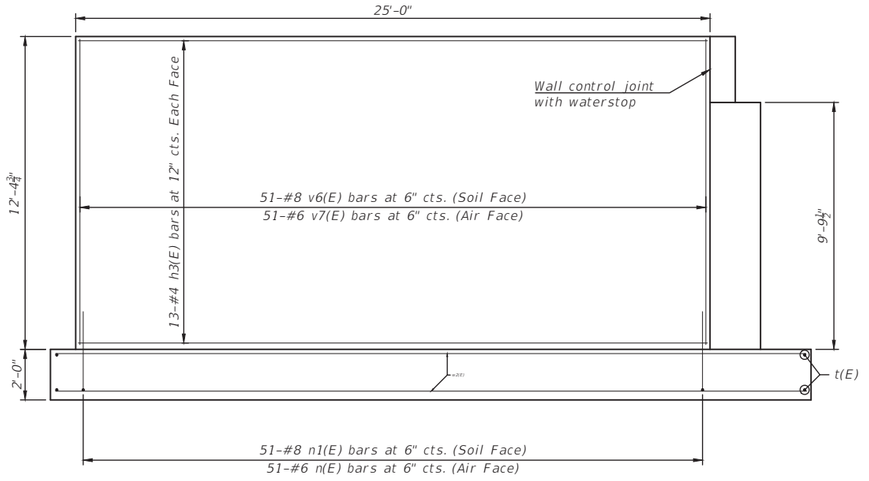

SECTION C-C - WINGWALL

(Looking East)

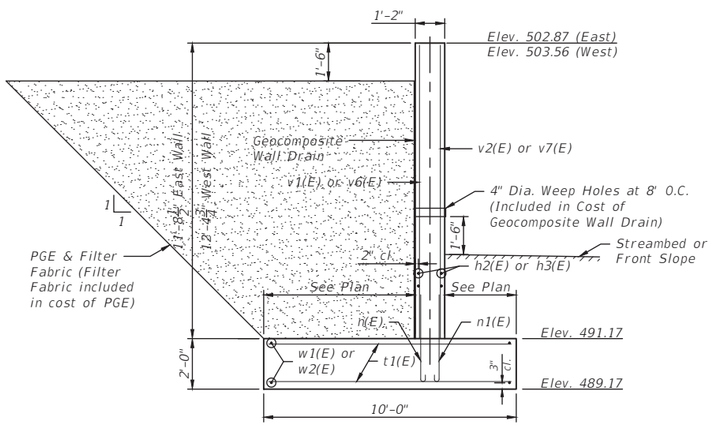

SECTION B-B - WINGWALL

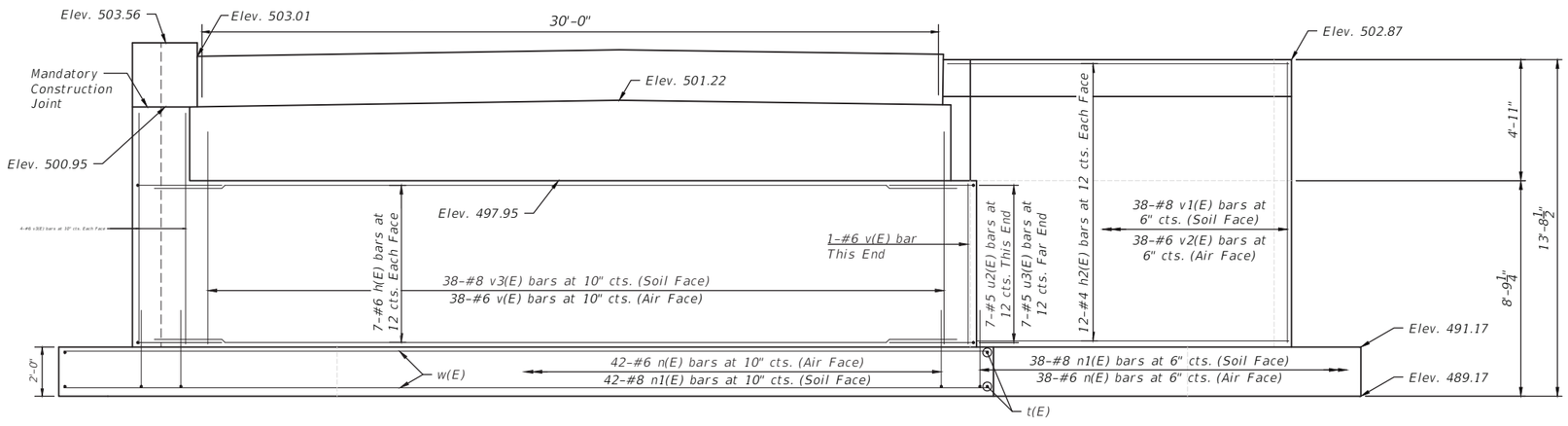

ELEVATION

CHAMLIN & ASSOCIATES, INC. © 2024
Drawing Name: R:\USERS\1 - STRUCTURAL\111641.01 - Ottawa Post St. Bridge Repl Design Ph II\CAD\PLANS\111641.01-02A-ABUT N.dwg Last Modified: Thursday, October 22, 2026 3:14:19 PM Plotted On: Thursday, October 22, 2026 3:26:09 PM by Kurt Decker

DRAWN BY: KED	REVISIONS				PERU MORRIS OTTAWA ILLINOIS	POST STREET BRIDGE REPLACEMENT SECTION 25-00177-00-BR LASALLE COUNTY	ABUTMENTS - NORTH S.N. 050-7401 (E) S.N. 050-7406 (P)	BID SET	CURRENT AS OF: 10/20/2026	
CHECKED BY: JLS	LEVEL	BY	DATE	DESCRIPTION			SHEET 15 of 19 SHEETS		SCALE: AS NOTED	SHEET 24
DATE: 02/2026									FILE NO.: 111641.01 Y–	OF 28

F.A.S. RTE.	SECTION	COUNTY	TOTAL SHEETS	SHEET NO.
----	25-00177-00-BR	LASALLE	28	25
	---- ILLINOIS	CONTRACT NO. L0C16		

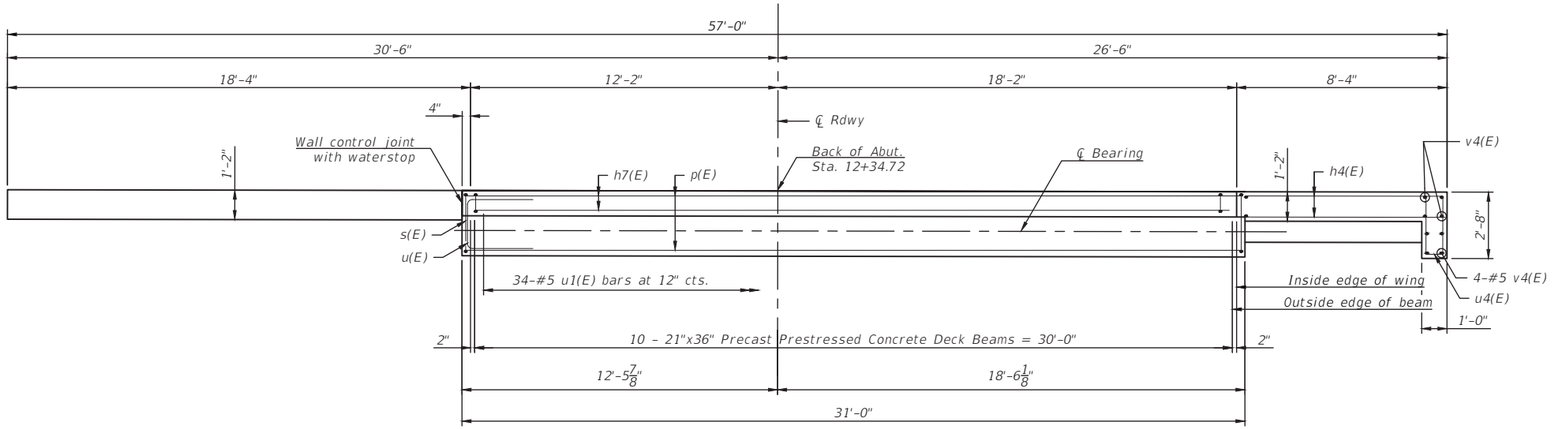

TOP PLAN

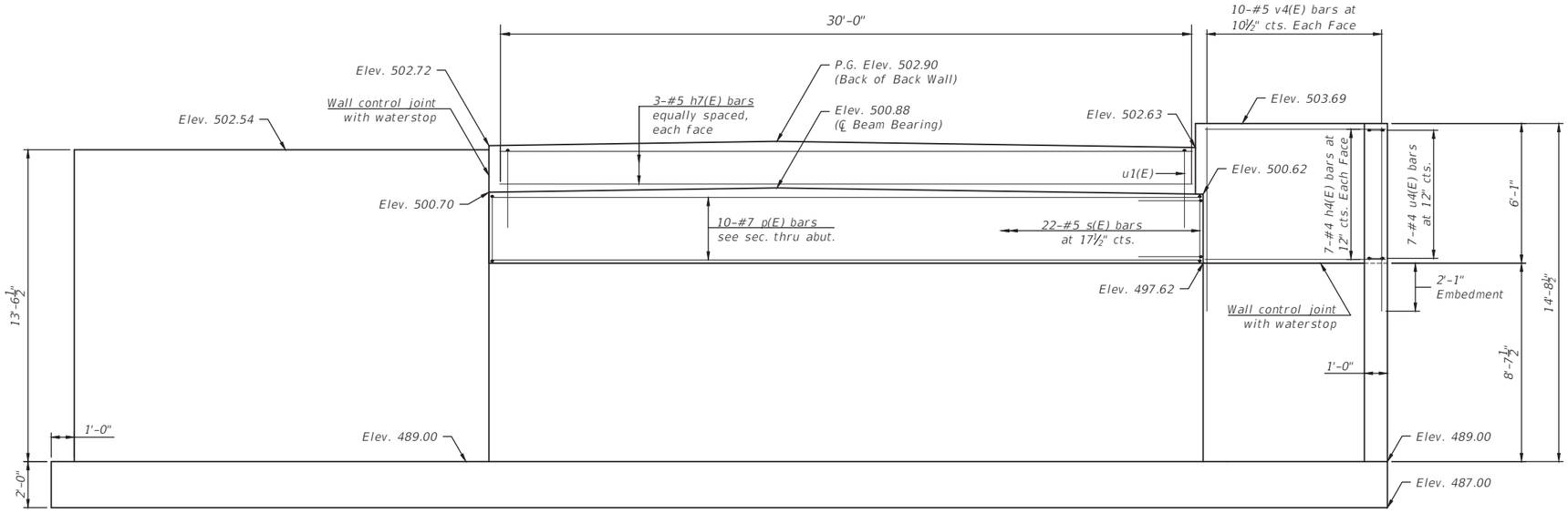

ELEVATION

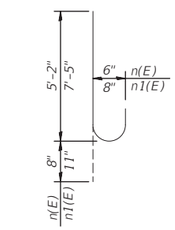

BARS n(E) & n1(E)

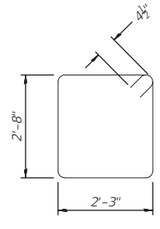

BAR s(E)

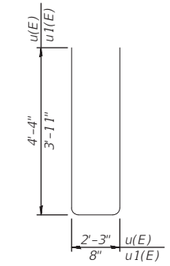

BARS u(E) & u1(E)

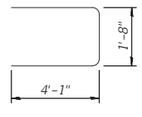

BAR u3(E)

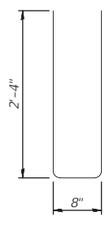

BARS u4(E)

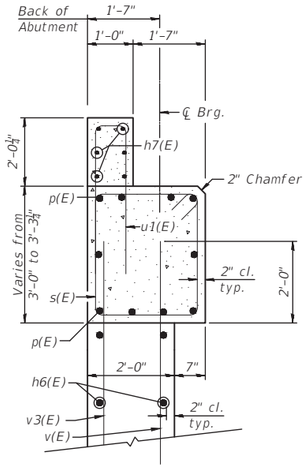

SECTION A-A

BILL OF MATERIAL

Bar	No.	Size	Length	Shape
h4(E)	14	#4	8'-0"	
h5(E)	28	#4	17'-8"	
h6(E)	18	#6	38'-8"	
h7(E)	6	#5	30'-8"	
n(E)	85	#6	5'-10"	
n1(E)	85	#8	8'-4"	
p(E)	10	#7	30'-8"	
s(E)	22	#5	10'-7"	
t(E)	136	#8	11'-8"	
u(E)	18	#6	10'-11"	
u1(E)	34	#5	8'-6"	
u4(E)	16	#4	5'-4"	
v4(E)	24	#5	8'-0"	
v5(E)	48	#8	10'-6"	
v8(E)	37	#8	13'-2"	
v9(E)	37	#6	13'-2"	
v10(E)	48	#6	10'-6"	
w(E)	52	#5	31'-0"	
x(E)	8	#5	4'-0"	
Structure Excavation			Cu. Yd.	400
Concrete Structures			Cu. Yd.	101
Reinforcement Bars, Epoxy Coated			Pound	16090

Notes:
Cast backwall and tops of wingwalls after beams have been erected.
Space reinforcement in cap to miss anchor bolts.

CHAMLIN & ASSOCIATES, INC. © 2024
Drawing Name: R:\USERS\1 - STRUCTURAL\111641.01 - Ottawa Post St. Bridge Repl Design Ph II\CAD\PLANS\111641.01-025-ABUT S.dwg Last Modified: Thursday, October 22, 2026 2:15:37 PM Plotted On: Thursday, October 22, 2026 3:27:04 PM by Kurt Decker

DRAWN BY: KED
CHECKED BY: JLS
DATE: 02/2026

REVISIONS			
LEVEL	BY	DATE	DESCRIPTION

Chamlin & Associates
PERU MORRIS OTTAWA ILLINOIS

POST STREET BRIDGE REPLACEMENT
SECTION 25-00177-00-BR
LASALLE COUNTY

ABUTMENTS - SOUTH
S.N. 050-7401 (E) S.N. 050-7406 (P)
SHEET 16 of 19 SHEETS

BID SET

CURRENT AS OF: **10/20/2026**
SCALE: AS NOTED | SHEET **25**
FILE NO.: 111641.01 Y– | OF **28**

F.A.S. RTE.	SECTION	COUNTY	TOTAL SHEETS	SHEET NO.
----	25-00177-00-BR	LASALLE	28	26
	--- ILLINOIS	CONTRACT NO. L0C16		

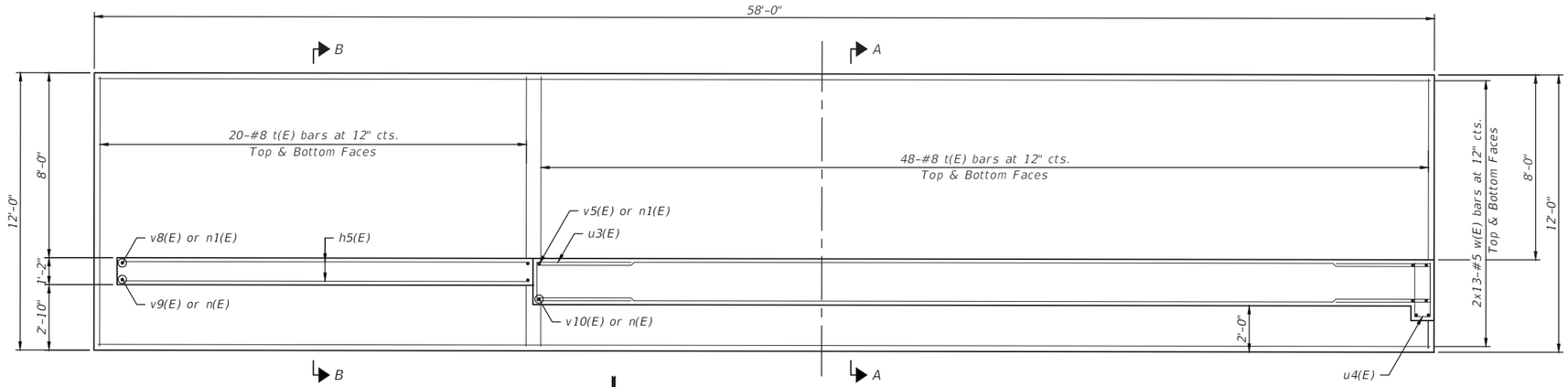

FOOTING PLAN

#5 Horizontal Lap Length = 2'-9" Minimum

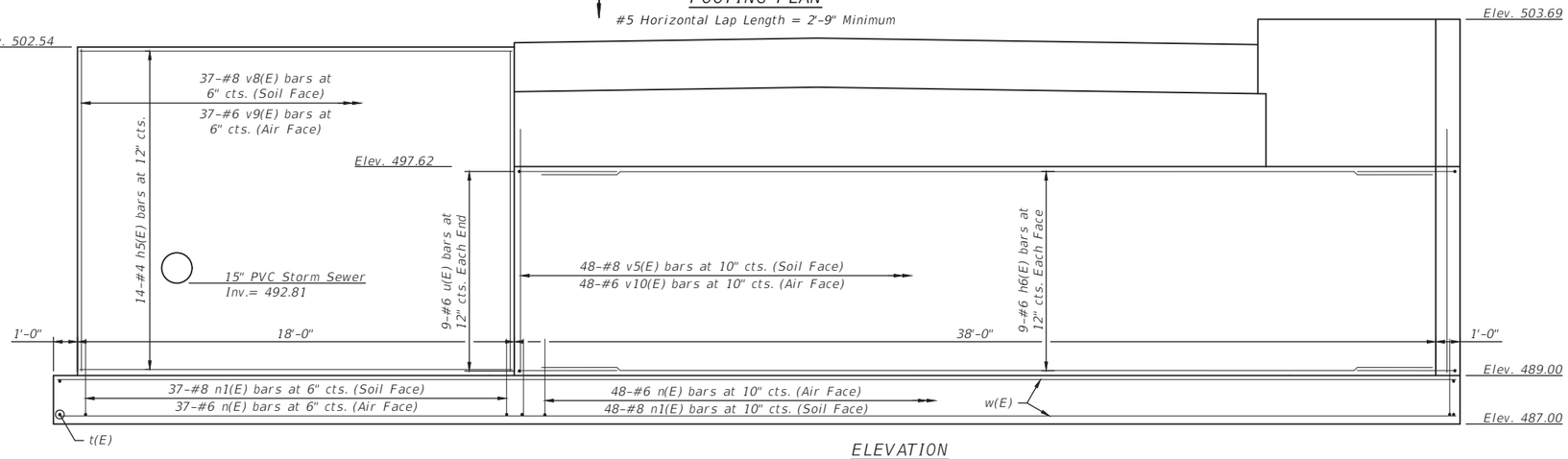

ELEVATION

(Looking South)

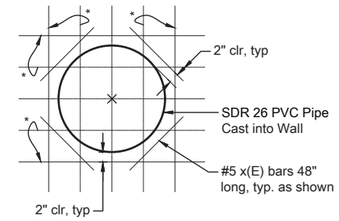

PIPE PENETRATION OF CONCRETE WALL DETAIL

*Reinforcement in conflict with pipe penetration shall be adjusted up to 1/2 specified bar spacing. Reinforcement shall otherwise be cut as shown.

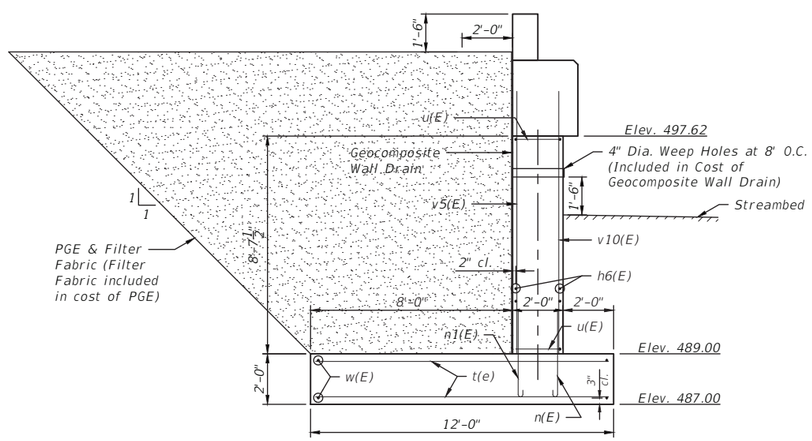

SECTION A-A - ABUTMENT

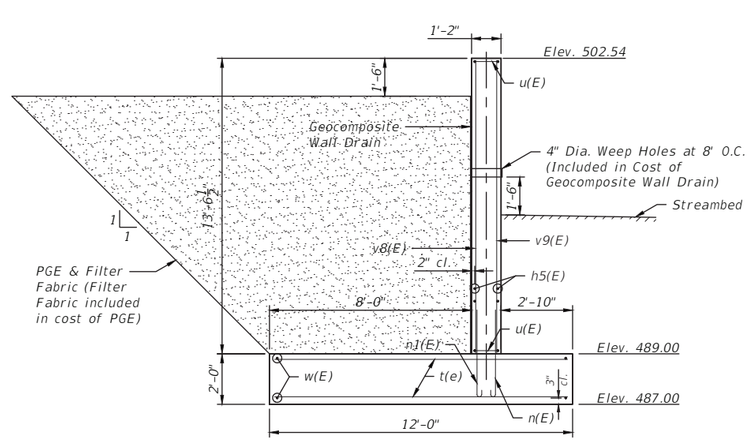

SECTION B-B - WINGWALL

CHAMLIN & ASSOCIATES, INC. © 2024
Drawing Name: K:\USERS\11 - STRUCTURAL\111641.01 - Ottawa Post St. Bridge Repl Design Ph II\CAD\PLANS\111641.01-026-ABUT S.dwg Last Modified: Thursday, October 22, 2026 3:15:17 PM Plotted On: Thursday, October 22, 2026 3:29:13 PM by Kurt Decker

DRAWN BY: KED	REVISIONS			
CHECKED BY: JLS	LEVEL	BY	DATE	DESCRIPTION
DATE: 02/2026				

Chamlin & Associates
PERU MORRIS OTTAWA
ILLINOIS

POST STREET BRIDGE REPLACEMENT
SECTION 25-00177-00-BR
LASALLE COUNTY

ABUTMENTS - SOUTH
S.N. 050-7401 (E) S.N. 050-7406 (P)
SHEET 17 of 19 SHEETS

BID SET

CURRENT AS OF: 10/20/2026		
SCALE: AS NOTED	SHEET	26
FILE NO.: 111641.01 Y-	OF	28

F.A.S. RTE.	SECTION	COUNTY	TOTAL SHEETS	SHEET NO.
----	25-00177-00-BR	LASALLE	28	27
	---- ILLINOIS	CONTRACT NO. L0C16		

Midwest Testing Services, Inc.
3705 Progress Blvd.
Peru, IL 61354
Phone: 815-223-5696
Fax: 815-223-5659
e-mail: mts37@comcast.net

BORING LOG

Sheet 1 of 2

Client: Chamlin & Associates, Inc.
Project Name SN: 050-7401
Project Site: Post Street Bridge, North of Prairie Street
LaSalle Co., Ottawa, IL

Boring No. B-1
Surface Elev. 502.99
Auger Depth 31.00 Rotary Depth NA
Start Date 08/02/25 Finish Date 08/02/25

Location: South Abutment, 33' S. of Center & 2' E of CL
1712574.4194 2661273.0257

Drilled By: Randy Safranski, Diedrich D-120

(DEPTH) *ELEV.	DESCRIPTION OF MATERIALS	Depth in feet	Sample No.	Sample Type	Qu (TSF)*	N Value (Blows)	Bulge / Shear	Moisture (%)	Dry Density (PCF)	REMARKS
502.99										
501.99	Asphalt over Aggregate	1								
500.99	Loose Brown Sandy Loam	2								
499.99		3	1	SS	2.0	6	B	22		
498.99	Medium Stiff to Stiff Gray Clay	4								
497.99		5	2	SS	2.0	6	B	22		
496.99		6								
495.99	Medium Stiff to Stiff Black Clay	7								
494.99		8	3	SS	---	4	---	22		
493.99	Soft Brown/Gray Gravely Clay Loam	9								
492.99		10	4	SS	---	2	---	23		Water
491.99		11								
490.99		12								
489.99		13	5	SS	---	4	---	22		
488.99		14								
487.99	Medium Dense Gray Coarse Gravel	15								
486.99		16	6	SS	---	15	---	14		
485.99	Hard Gray Shale	17								
484.99		18	7	SS	2.2*	60*/12"	---	18		
483.99		19								
482.99	Hard Black Layered Coal	20	8	SS	8.9*	200*/12"	S	19		

Groundwater Data: Static water level after auger removal; Elevation 492.49
Comments: *Modified SPT as per IDOT

Midwest Testing Services, Inc.
3705 Progress Blvd.
Peru, IL 61354
Phone: 815-223-5696
Fax: 815-223-5659
e-mail: mts37@comcast.net

BORING LOG

Sheet 2 of 2

Client: Chamlin & Associates, Inc.
Project Name SN: 050-7401
Project Site: Post Street Bridge, North of Prairie Street
LaSalle Co., Ottawa, IL

Boring No. B-1
Surface Elev. 502.99
Auger Depth 31.00 Rotary Depth NA
Start Date 08/02/25 Finish Date 08/02/25

Location: South Abutment, 33' S. of Center & 2' E of CL
1712574.4194 2661273.0257

Drilled By: Randy Safranski, Diedrich D-120

(DEPTH) ELEV.	DESCRIPTION OF MATERIALS	Depth in feet	Sample No.	Sample Type	Qu (TSF)*	N Value (Blows)	Bulge / Shear	Moisture (%)	Dry Density (PCF)	REMARKS
481.99										
480.99		22								
479.99	Hard Gray Shaley Sandstone	23	9	SS	9.8*	240*/12"	---	15		
478.99		24								
477.99		25								
476.99		26	10	SS	9.8*	240*/12"	---	14		
475.99		27								
474.99	Hard Gray/White Sandstone	28	11	SS	17.8*	480*/12"	---	13		
473.99		29								
472.99		30								
471.99		31	12	SS	37.9*	960*/12"	---	14		
470.99	Auger Refusal Boring Terminated on White Sandstone	32								
469.99		33								
468.99		34								
467.99		35								
466.99		36								
465.99		37								
464.99		38								
463.99		39								
462.99		40								
461.99		41								

Groundwater Data: Static water level after auger removal; Elevation 492.49
Comments: *Modified SPT as per IDOT

CHAMLIN & ASSOCIATES, INC., © 2024
Drawing Name: R:\USERS\1 - STRUCTURAL\111641.01 - Ottawa Post St. Bridge Repl Design Ph II\CAD\PLANS\111641.01-027-BORINGS 01.dwg Last Modified: Monday, August 31, 2026 4:09:41 PM Plotted On: Wednesday, October 21, 2026 11:21:57 AM by Kurt Decker

DRAWN BY: KED	REVISIONS				PERU MORRIS OTTAWA ILLINOIS	POST STREET BRIDGE REPLACEMENT SECTION 25-00177-00-BR LASALLE COUNTY	SOIL BORINGS S.N. 050-7401 (E) S.N. 050-7406 (P)	BID SET	CURRENT AS OF: 10/20/2026	
CHECKED BY: JLS	LEVEL	BY	DATE	DESCRIPTION			SHEET 18 of 19 SHEETS		SCALE: AS NOTED	SHEET 27
DATE: 02/2026									FILE NO.: 111641.01 Y–	OF 28

F.A.S. RTE.	SECTION	COUNTY	TOTAL SHEETS	SHEET NO.
----	25-00177-00-BR	LASALLE	28	28
	---- ILLINOIS	CONTRACT NO. L0C16		

Midwest Testing Services, Inc.
3705 Progress Blvd.
Peru, IL 61354
Phone: 815-223-5696
Fax: 815-223-5659
e-mail: mts37@comcast.net

BORING LOG

Sheet 1 of 2

Client: Chamlin & Associates, Inc.
Project Name SN: 050-7401
Project Site: Post Street Bridge, North of Prairie Street
LaSalle Co., Ottawa, IL

Boring No. B-2
Surface Elev. 503.67
Auger Depth 31.00 Rotary Depth NA
Start Date 08/02/25 Finish Date 08/02/25

Location: North Abutment, 31' S. of Center & 1' E of CL
1712639.3606 2661271.5379

Drilled By: Randy Safranski, Diedrich D-120

(DEPTH) *ELEV. 503.67	DESCRIPTION OF MATERIALS	Graphic Log	Depth in feet	Sample No.	Sample Type	Qu (TSF)*	N Value (Blows)	Bulge / Shear	Moisture (%)	Dry Density (PCF)	REMARKS
502.67	Asphalt over Aggregate		1								
501.67	Medium Stiff Black Silty Clay Fill		2								
500.67			3	1	SS	1.0	6	B	27		
499.67			4								
498.67			5								
497.67			6	2	SS	1.6	6	B	21		
496.67	Medium Stiff to Stiff Brown/Gray Silty Clay		7								
495.67			8	3	SS	1.5	6	B	22		
494.67			9								
493.67			10								
492.67			11	4	SS	1.2	4	---	23		
491.67	Medium Stiff Brown/Gray Gravely Clay Loam		12								
490.67			13	5	SS	---	5	---	20		
489.67			14								
488.67			15								
487.67	Hard Gray Shale		16	6	SS	2.2*	60*/12"	---	18		
486.67			17								
485.67			18	7	SS	2.2*	60*/12"	---	18		
484.67	Hard Brown/Black Layered Coal		19								
483.67			20								
	Hard Brown Underclay			8	SS	8.9*	200*/12"	S	19		

Groundwater Data: Bore hole dry after auger removal.
Comments: *Modified SPT as per IDOT

Midwest Testing Services, Inc.
3705 Progress Blvd.
Peru, IL 61354
Phone: 815-223-5696
Fax: 815-223-5659
e-mail: mts37@comcast.net

BORING LOG

Sheet 2 of 2

Client: Chamlin & Associates, Inc.
Project Name SN: 050-7401
Project Site: Post Street Bridge, North of Prairie Street
LaSalle Co., Ottawa, IL

Boring No. B-2
Surface Elev. 503.67
Auger Depth 31.00 Rotary Depth NA
Start Date 08/02/25 Finish Date 08/02/25

Location: North Abutment, 31' S. of Center & 1' E of CL
1712639.3606 2661271.5379

Drilled By: Randy Safranski, Diedrich D-120

(DEPTH) ELEV. 482.67	DESCRIPTION OF MATERIALS	Graphic Log	Depth in feet	Sample No.	Sample Type	Qu (TSF)*	N Value (Blows)	Bulge / Shear	Moisture (%)	Dry Density (PCF)	REMARKS
481.67			22								
480.67	Hard Gray Shaley Sandstone		23	9	SS	9.8*	240*/12"	---	15		
479.67			24								
478.67			25								
477.67			26	10	SS	9.8*	240*/12"	---	14		
476.67			27								
475.67	Hard Gray/White Sandstone		28	11	SS	17.8*	480*/12"	---	13		
474.67			29								
473.67			30								
472.67	Auger Refusal Boring Terminated on White Sandstone		31	12	SS	37.9*	960*/12"	---	14		
471.67			32								
470.67			33								
469.67			34								
468.67			35								
467.67			36								
466.67			37								
465.67			38								
464.67			39								
463.67			40								
462.67			41								

Groundwater Data: Bore hole dry after auger removal.
Comments: *Modified SPT as per IDOT

CHAMLIN & ASSOCIATES, INC., © 2024
Drawing Name: R:\USERS\1 - STRUCTURAL\111641.01 - Ottawa Post St. Bridge Repl Design Ph II\CAD\PLANS\111641.01-028-BORINGS 02.dwg Last Modified: Monday, August 31, 2026 4:09:31 PM Plotted On: Wednesday, October 21, 2026 11:22:40 AM by Kurt Decker

DRAWN BY: KED	REVISIONS				PERU MORRIS OTTAWA ILLINOIS	POST STREET BRIDGE REPLACEMENT SECTION 25-00177-00-BR LASALLE COUNTY	SOIL BORINGS S.N. 050-7401 (E) S.N. 050-7406 (P)	BID SET	CURRENT AS OF: 10/20/2026	
CHECKED BY: JLS	LEVEL	BY	DATE	DESCRIPTION			SHEET 19 of 19 SHEETS		SCALE: AS NOTED	SHEET 28
DATE: 02/2026									FILE NO.: 111641.01 Y–	OF 28